PUB. DIE-0463-000

Canon

HD Camcorder

EOS C100 Mark II

Instruction Manual

AVCHD Progressive MP4 HDMI Wi Fi CERTIFIED

Downloaded From camera-usermanual.com Canon Manuals

Important Usage Instructions

WARNING
TO REDUCE THE RISK OF FIRE OR ELECTRIC SHOCK, DO NOT EXPOSE THIS PRODUCT TO RAIN OR MOISTURE.

TO REDUCE THE RISK OF ELECTRIC SHOCK, DO NOT EXPOSE THIS PRODUCT TO DRIPPING OR SPLASHING.

WARNING
TO REDUCE THE RISK OF ELECTRIC SHOCK AND TO REDUCE ANNOYING INTERFERENCE, USE THE RECOMMENDED ACCESSORIES ONLY.

COPYRIGHT WARNING:
Unauthorized recording of copyrighted materials may infringe on the rights of copyright owners and be contrary to copyright laws.

The Mains plug is used as the disconnect device. The Mains plug shall remain readily operable to disconnect the plug in case of an accident.

CAUTION:
- Danger of explosion if the wrong type of batteries are attached. Use only the same type of batteries.
- Do not expose batteries or product to excessive heat such as the inside of a car under direct sunlight, fire, etc.

EOS C100 Mark II / CG-940 / CA-940N* or CA-941 identification plate is located on the bottom.

* Supplied with camcorders sold in the United States, Canada and Mexico only. The CA-941 is supplied with camcorders sold in other regions.

Downloaded From camera-usermanual.com Canon Manuals

FCC NOTICE

HD Camcorder, C100 Mark II Systems.

This device complies with Part 15 of the FCC Rules. Operation is subject to the following two conditions: (1) This device may not cause harmful interference, and (2) this device must accept any interference received, including interference that may cause undesired operation.

Note: This equipment has been tested and found to comply with the limits for class B digital device, pursuant to Part 15 of the FCC Rules. These limits are designed to provide reasonable protection against harmful interference in a residential installation. This equipment generates, uses and can radiate radio frequency energy and, if not installed and used in accordance with the instructions, may cause harmful interference to radio communications. However, there is no guarantee that interference will not occur in a particular installation. If this equipment does cause harmful interference to radio or television reception, which can be determined by turning the equipment off and on, the user is encouraged to try to correct the interference by one or more of the following measures:

- Reorient or relocate the receiving antenna.
- Increase the separation between the equipment and receiver.
- Connect the equipment into an outlet on a circuit different from that to which the receiver is connected.
- Consult the dealer or an experienced radio/TV technician for help.

Use of shielded cable is required to comply with class B limits in Subpart B of Part 15 of FCC Rules.
Do not make any changes or modifications to the equipment unless otherwise specified in the manual. If such changes or modifications should be made, you could be required to stop operation of the equipment.

Model ID0042 (including WLAN Module Model RF400, FCC ID: AZD400)

This device complies with Industry Canada license-exempt RSS standard(s). Operation is subject to the following two conditions: (1) this device may not cause interference, and (2) this device must accept any interference, including interference that may cause undesired operation of the device.
This transmitter must not be co-located or operated in conjunction with any other antenna or transmitter.
The available scientific evidence does not show that any health problems are associated with using low power wireless devices. There is no proof, however, that these low power wireless devices are absolutely safe. Low power wireless devices emit low levels of radio frequency energy (RF) in the microwave range while being used. Whereas high levels of RF can produce health effects (by heating tissue), exposure of low-level RF that does not produce heating effects causes no known adverse health effects. Many studies of low-level RF exposures have not found any biological effects. Some studies have suggested that some biological effects might occur, but such findings have not been confirmed by additional research. This model has been tested and found to comply with FCC/IC radiation exposure limits set forth for an uncontrolled equipment and meets the FCC radio frequency (RF) Exposure Guidelines and RSS-102 of the IC radio frequency (RF) Exposure rules.
Compliance with FCC requirement 15.407(c) Data transmission is always initiated by software, which is the passed down through the MAC, through the digital and analog baseband, and finally to the RF chip. Several special packets are initiated by the MAC. These are the only ways the digital baseband portion will turn on the RF transmitter, which it then turns off at the end of the packet. Therefore, the transmitter will be on only while one of the aforementioned packets is being transmitted. In other words, this device automatically discontinues transmission in case of either absence of information to transmit or operational failure.

Frequency Tolerance: 25 ppm

Canon U.S.A., Inc.
One Canon Park, Melville, NY 11747, USA
Tel No. 1-800-OK-CANON (1-800-652-2666)

Downloaded From camera-usermanual.com Canon Manuals

CAUTION:
TO REDUCE THE RISK OF ELECTRIC SHOCK, DO NOT REMOVE COVER (OR BACK). NO USER-SERVICEABLE PARTS INSIDE. REFER SERVICING TO QUALIFIED SERVICE PERSONNEL.

The lightning flash with arrowhead symbol, within an equilateral triangle, is intended to alert the user to the presence of uninsulated “dangerous voltage” within the product’s enclosure, that may be of sufficient magnitude to constitute a risk of electric shock to persons.

The exclamation point, within an equilateral triangle, is intended to alert the user to the presence of important operating and maintenance (servicing) instructions in the literature accompanying the product.

Only for European Union and EEA (Norway, Iceland and Liechtenstein)

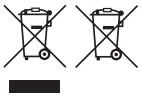

These symbols indicate that this product is not to be disposed of with your household waste, according to the WEEE Directive (2012/19/EU), the Battery Directive (2006/66/EC) and/or national legislation implementing those Directives.
If a chemical symbol is printed beneath the symbol shown above, in accordance with the Battery Directive, this indicates that a heavy metal (Hg = Mercury, Cd = Cadmium, Pb = Lead) is present in this battery or accumulator at a concentration above an applicable threshold specified in the Battery Directive.
This product should be handed over to a designated collection point, e.g., on an authorized one-for-one basis when you buy a new similar product or to an authorized collection site for recycling waste electrical and electronic equipment (EEE) and batteries and accumulators. Improper handling of this type of waste could have a possible impact on the environment and human health due to potentially hazardous substances that are generally associated with EEE. Your cooperation in the correct disposal of this product will contribute to the effective usage of natural resources.
For more information about the recycling of this product, please contact your local city office, waste authority, approved scheme or your household waste disposal service or visit www.canon-europe.com/weee, or www.canon-europe.com/battery.

Downloaded From camera-usermanual.com Canon Manuals

Important Safety Instructions

In these safety instructions the word “apparatus” refers to the Canon HD Camcorder EOS C100 Mark II and all its accessories.

1. Read these instructions.
2. Keep these instructions.
3. Heed all warnings.
4. Follow all instructions.
5. Do not use this apparatus near water.
6. Clean only with dry cloth.
7. Do not block any ventilation openings. Install in accordance with the manufacturer’s instructions.
8. Do not install near any heat sources such as radiators, heat registers, stoves, or other apparatus (including amplifiers) that produce heat.
9. Do not defeat the safety purpose of the polarized or grounding-type plug. A polarized plug has two blades with one wider than the other. A grounding type plug has two blades and a third grounding prong. The wide blade or the third prong are provided for your safety. If the provided plug does not fit into your outlet, consult an electrician for replacement of the obsolete outlet.
10. Protect the power cord from being walked on or pinched particularly at plugs, convenience receptacles, and the point where they exit from the apparatus.
11. Only use attachments/accessories specified by the manufacturer.
12. Unplug this apparatus during lightning storms or when unused for long periods of time.
13. Refer all servicing to qualified service personnel. Servicing is required when the apparatus has been damaged in any way, such as power-supply cord or plug is damaged, liquid has been spilled or objects have fallen into the apparatus, the apparatus has been exposed to rain or moisture, does not operate normally, or has been dropped.

CAN ICES-3(B)/NMB-3(B)

REGIONS OF USE (for model ID0042)
C100 Mark II is in compliance (as of November 2014) with the radio signal regulations of the regions listed below. For details on other regions where they can be used, make inquiries with the contacts listed on the back cover of this instruction manual.

REGIONS
Canada, Hong Kong S.A.R., South Korea, Taiwan, USA

Model
ID0042: C100 Mark II

REGIONS OF USE (for model ID0043)
C100 Mark II is in compliance (as of November 2014) with the radio signal regulations of the regions listed below. For details on other regions where they can be used, make inquiries with the contacts listed on the back cover of this instruction manual.

REGIONS	Radio channels prohibited for outdoor use
Australia, Austria, Belgium, Bulgaria, Cyprus, Czech Republic, Denmark, Estonia, Finland, France, Germany, Greece, Hong Kong S.A.R., Hungary, Iceland, Ireland, Italy, Latvia, Liechtenstein, Lithuania, Luxembourg, Malta, Netherlands, New Zealand, Norway, Poland, Portugal, Romania, Slovakia, Slovenia, Spain, Sweden, Switzerland, United Kingdom	Channels 36 to 64
Russia, Singapore	Not prohibited

Downloaded From camera-usermanual.com Canon Manuals

Statement on EC directive

Hereby, Canon Inc., declares that this RF400 is in compliance with the essential requirements and other relevant provisions of Directive 1999/5/EC.

Please contact the following address for the original Declaration of Conformity:
CANON EUROPA N.V.
Bovenkerkerweg 59, 1185 XB Amstelveen, The Netherlands
CANON INC.
30-2, Shimomaruko 3-chome, Ohta-ku, Tokyo 146-8501, Japan

Model
ID0043: C100 Mark II

Complies with
IDA Standards
DB00671

This product is installed with the WLAN module which is certified to standards set by IDA Singapore.

Trademark Acknowledgements

- SD, SDHC and SDXC Logos are trademarks of SD-3C, LLC.
- Microsoft and Windows are trademarks or registered trademarks of Microsoft Corporation in the United States and/or other countries.
- Apple, Mac OS are trademarks of Apple Inc., registered in the U.S. and other countries.
- HDMI, the HDMI logo and High-Definition Multimedia Interface are trademarks or registered trademarks of HDMI Licensing LLC in the United States and other countries.
- “AVCHD”, “AVCHD Progressive” and the “AVCHD Progressive” logo are trademarks of Panasonic Corporation and Sony Corporation.
- Manufactured under license from Dolby Laboratories.
  “Dolby” and the double-D symbol are trademarks of Dolby Laboratories.
- Wi-Fi is a registered trademark of the Wi-Fi Alliance.
- Wi-Fi Certified, WPA, WPA2, and the Wi-Fi Certified logo are trademarks of the Wi-Fi Alliance.
- WPS as used on the camcorder's settings, onscreen displays and in this manual signifies Wi-Fi Protected Setup.
- The Wi-Fi Protected Setup Identifier Mark is a mark of the Wi-Fi Alliance.
- JavaScript is a trademark or registered trademark of Oracle Corporation, its affiliates or subsidiaries in the United States and other countries.
- Other names and products not mentioned above may be trademarks or registered trademarks of their respective companies.
- This device incorporates exFAT technology licensed from Microsoft.
- This product is licensed under AT&T patents for the MPEG-4 standard and may be used for encoding MPEG-4 compliant video and/or decoding MPEG-4 compliant video that was encoded only (1) for a personal and non-commercial purpose or (2) by a video provider licensed under the AT&T patents to provide MPEG-4 compliant video. No license is granted or implied for any other use for MPEG-4 standard.

Downloaded From camera-usermanual.com Canon Manuals

Highlights of the EOS C100 Mark II

The Canon HD Camcorder EOS C100 Mark II, the newest addition to the acclaimed EOS line, boasts an advanced CMOS sensor that allows you to record video with remarkable image quality and exceptional low-light performance. The modular yet compact design will help you shoot in tight situations. With a wide range of functions and flexible usability, this camcorder has been designed with the discerning professional in mind.

HD Recording

Large Super 35mm CMOS sensor and DIGIC DV 4 image processor

The camcorder is equipped with a large Super 35mm CMOS sensor that captures video at an effective pixel count of 8.29 megapixels (3840x2160). Combined with the DIGIC DV 4 image processor, the camcorder offers a center resolution of 1,000 TV lines.

Interchangeable lenses

Enjoy the freedom and creative versatility of using interchangeable lenses to achieve exactly the look you want. The camcorder features an EF lens mount allowing you to use a huge variety of high-quality Canon EF lenses, including the new high-end Canon Cinema lenses, as well as other lenses.

Superb HD video

The camcorder offers you a whole array of options when it comes to the video configuration of your recordings. By controlling the system frequency (50.00 Hz recordings or 59.94 Hz recordings), movie format (AVCHD or MP4), bit rate, resolution and frame rate of your recordings you can select a video configuration to suit your needs from a variety of combinations. For example, you can set a maximum frame rate of 59.94P (for 59.94 Hz recordings) or 50.00P (for 50.00 Hz recordings).

Operability and Adaptability

Freely customizable compact design

At its most compact configuration, the camcorder offers convenient and hassle-free hand-held operation. Modular components let you expand your options. The handle unit, for example, adds advanced audio capabilities allowing for simple one-person operation (📖 31).

Recording media

The camcorder supports various types of Secure Digital (SD) cards (📖 40). You can even make lengthy recordings without worry because the camcorder features two SD card slots. When one SD card becomes full, the recording will automatically continue on the other one when you use relay recording (📖 43).

AVCHD/MP4 recording and double slot recording

When you record, you can choose between AVCHD (28 Mbps maximum bit rate) and MP4 (35 Mbps maximum bit rate) formats (📖 54). You can also use double slot recording (📖 43) to record the same scene to both memory cards and even record on both memory cards using different formats. Double slot recording is convenient, for example, to create a backup of your recording.

Enhanced automatic functions

The camera features a variety of automatic functions to support a simple one-person operation. These include automatic aperture and push auto iris (📖 63) for automatic aperture adjustment as long as you press and hold the button, automatic white balance (📖 69) to let the camcorder continuously adjust the optimal white balance setting, and continuous AF or One-shot AF (📖 71) to let the camcorder focus automatically one time. Because this camcorder incorporates Dual Pixel CMOS AF technology, continuous AF allows you to continuously focus on the subject at the center of the screen automatically.

Versatile Artistic Expression

Custom picture settings

With custom picture settings (📖 110), you can enjoy unparalleled image control to deliver the look you want by adjusting parameters, such as gamma and color matrix. The camcorder also features an easy interface that lets you adjust the gamma curve and white balance using an intuitive graph. The custom picture settings can be saved onto an SD card, which allows multiple C100 Mark II camcorders to use the same settings.

Canon Log gamma for cinematic recordings

You can easily apply the [CP CINEMA Locked] preset settings, especially designed with professional cinematography in mind (📖 53). The Canon Log gamma makes the most of the image sensor to achieve amazing dynamic range, allowing you to realize in post-production the artistic vision you desire. Alternatively, you can enable Canon Log gamma using the custom picture settings (📖 111).

Downloaded From camera-usermanual.com Canon Manuals

Special recording modes (📖 96)
When you make recordings, you can change the recording frame rate to achieve a fast or slow motion effect. Alternatively, you can use pre-recording to record 3 seconds before you decide to start recording, helping you capture those hard-to-catch opportunities.

Advanced Professional Features

Customization
The camcorder features several customization options. You can assign often-used functions to assignable buttons (📖 107) so that you can call up those functions with the press of a single button. You can also register frequently-used menu settings in an easy-to-access personal menu (My Menu, 📖 29). Custom functions (📖 121) and custom onscreen displays (📖 122) give you even more freedom to control many aspects of the camcorder's operation. Save custom picture and menu settings to an SD card (📖 123) so that you can transfer your setting preferences to other C100 Mark II camcorders in order to use them in the same way.

Time code/User bit output
The internal camcorder-generated time code can be output from the HDMI OUT terminal for easy logging and referencing (📖 170). Additionally, the camcorder can output also the user bit (📖 83).

Audio
When recording at the certain bit rates, you have the option to record sound as 2-channel linear PCM audio (16-bit/48 kHz). You can use the built-in microphone, ∅ 3.5 mm MIC terminal or the two XLR audio input terminals (with phantom power supply) when recording. There is even a built-in monaural microphone you can use to record comments while shooting (📖 84).

Other Functions

OLED screen and LCD viewfinder
The camcorder is equipped with an OLED screen with incredible color reproduction, contrast and response time. The viewfinder can be tilted 68 degrees upward, which gives you additional range and versatility while you shoot.

Video scopes
Check the brightness of the image using the waveform monitor (📖 92) or the focus using the edge monitor (📖 93).

Wi-Fi network functions (📖 145)
You will find the camcorder's Wi-Fi functionality useful in everyday shooting and playback situations. After you connect the camcorder to a network, you can, for example, use the browser on a network device to control the camcorder remotely (Browser Remote) or play back recordings on the camcorder (Playback via Browser), and transfer recordings to an FTP server (📖 158).

Added and improved functionality
Other functions include the ability to convert your recordings to MP4 in the camcorder itself (📖 133), and the Intelligent System-compatible battery pack (📖 200). Also, you can set the camcorder to continuous recording (📖 98) so that you do not miss shooting any of the action. Additionally, the camcorder is compatible with the optional RC-V100 Remote Controller (📖 105), which gives you access to a multitude of functions.

Downloaded From camera-usermanual.com Canon Manuals

Table of Contents

1. Introduction 13

About this Manual 13
- Conventions Used in this Manual 13

Supplied Accessories 15

Names of Parts 16
- Grip Unit 20
- Handle Unit 21
- EF24-105mm f/4L IS USM Lens 22
- EF-S18-135mm f/3.5-5.6 IS STM Lens 22

2. Preparations 23

Preparing the Power Supply 23
- Using a Battery Pack 23
- Using a Power Outlet 25
- Turning the Camcorder On and Off 25

Date, Time and Language Settings 26
- Setting the Date and Time 26
- Changing the Time Zone 26
- Changing the Language 27

Using the Menus 28
- Selecting an Option from the Menu 28
- Using the Customized Submenu (My Menu) 29

Preparing the Camcorder 31
- Preparing the Lens 31
- Configuring the Modular Units 34
- Attaching and Removing the Handle Unit 34
- Removing and Attaching the Grip Unit 35
- Using the Viewfinder 36
- Using the OLED Panel 37
- Adjusting the Viewfinder/OLED Screen 37
- Adjusting the Color Balance of the OLED Screen 38
- Using a Tripod 38
- Attaching a Shoulder Strap 39
- Removing and Attaching the Terminal Covers 39

Using an SD Card 40
- SD Cards Compatible for Use with the Camcorder 40
- Inserting and Removing an SD Card 41
- Checking the Status of the SD Card Slots 41
- Initializing an SD Card 42
- Switching Between the SD Card Slots 42
- Relay Recording and Double Slot Recording 43
- Checking the Remaining Recording Time on the SD Card 43
- Recovering Data on an SD Card 44

Adjusting the Black Balance 45

3. Recording 47

Recording Video 47
- Preparing to Record 47
- Recording 47
- Remote Operation Using Browser Remote 49
- Onscreen Displays 50
- The Camcorder's Cooling System 52
- Canon Log Gamma and CINEMA Preset 53

Video Configuration: Movie Format, System Frequency, Bit Rate and Frame Rate 54
- Selecting the Movie Format (AVCHD/MP4) 54
- Selecting the System Frequency 54
- Selecting the Bit Rate 54
- Selecting the Frame Rate 55

Changing Main Camera Functions with the Joystick 56

Shutter Speed Mode 57
- Changing the Shutter Speed Mode 58
- Adjusting the Shutter Value 58
- Flicker Reduction 59

ISO Speed/Gain 60
- Changing the ISO Speed or Gain Settings 60
- Adjusting the ISO/Gain Value 61
- Remote Operation Using Browser Remote 61

ND Filter 62

Downloaded From camera-usermanual.com Canon Manuals

Adjusting the Aperture 63
Manual Aperture Control 63
Momentary Automatic Aperture - Push Auto Iris 65
Automatic Aperture 66
Exposure Compensation - AE Shift 66
Light Metering Mode 67
White Balance 68
Custom White Balance 68
Preset White Balance Settings 69
Color Temperature Setting 69
Auto White Balance 69
Remote Operation Using Browser Remote 70
Adjusting the Focus 71
Manual Focus 71
One-Shot AF 74
Continuous AF 74
Detecting and Focusing On Faces (Face AF) 76
Onscreen Markers and Zebra Patterns 78
Displaying Onscreen Markers 78
Displaying Zebra Patterns 79
Setting the Time Code 80
Selecting the Running Mode 80
Selecting Drop or Non-Drop Frame 81
Putting the Time Code Display on Hold 81
Setting the User Bit 83
Recording Audio 84
Connecting an External Microphone or External Audio Input Source to the Camcorder 84
Switching to the Built-in Microphone or External Microphone (MIC Terminal) 85
Adjusting the Audio Level for the Built-in Microphone and an External Microphone (MIC Terminal) 85
Using Audio Input from the XLR Terminals 88
Adjusting the Audio Level for the XLR Terminals 89
Monitoring the Audio with Headphones 90
Color Bars/Audio Reference Signal 91
Recording Color Bars 91
Recording an Audio Reference Signal 91
Video Scopes 92
Displaying a Video Scope 92
Configuring the Waveform Monitor 92
Configuring the Vectorscope 93
Configuring the Edge Monitor 93
Reviewing a Recording 94
Selecting the File Numbering Method 95
Special Recording Modes 96
Pre-recording Mode 96
Slow & Fast Motion Mode 96
Continuous Recording 98
Using Accessories 100
Using the EF24-105mm f/4L IS USM and EF-S18-135mm f/3.5-5.6 IS STM Lenses 100
Using the Optional GP-E2 GPS Receiver 103
Using the Optional RC-V100 Remote Controller 105

4. Customization 107

Assignable Buttons 107
Changing the Assigned Function 107
Using an Assignable Button 108
Custom Picture Settings 110
Selecting Custom Picture Files 111
Editing a Custom Picture File's Settings 112
Renaming Custom Picture Files 112
Protecting Custom Picture Files 112
Transferring Custom Picture Files 113
Embedding Custom Picture Settings in a Recording 114
Available Custom Picture Settings 114
Simplified Graphical Interface 120
Customizing Functions and Onscreen Displays 121
Customizing Functions 121
Customizing Onscreen Displays 122
Saving and Loading Camera Settings 123
Saving Camera Settings to an SD Card 123
Loading Camera Settings from an SD Card 123

Downloaded From camera-usermanual.com Canon Manuals

5. Playback 125

Playback 125
- AVCHD and MP4 Index Screens 125
- Playing Back Clips 127
- Onscreen Displays 128
- Playback Controls 129
- Adjusting the Volume 129

Clip Operations 131
- Using the Clip Menu 131
- Copying Clips 131
- Deleting Clips and Shots 132
- Converting Clips to MP4 133

6. External Connections 135

Video Output Configuration 135

Connecting to an External Monitor 137
- Connection Diagram 137
- Using the HDMI OUT Terminal 137
- Using the AV OUT Terminal 138
- SD Output 139
- Superimposing Onscreen Displays to Appear on an External Monitor 139

Audio Output 141
- Selecting the Audio Channel 141
- Synchronizing the Video with the Audio being Monitored 141
- Selecting the Output Level of the AV OUT Terminal 142

Saving Clips to a Computer 143
- Connection Diagram 143

7. Wi-Fi Functions 145

About the Wi-Fi Functions 145

Connecting to a Wi-Fi Network 146
- Wi-Fi Protected Setup (WPS) 146
- Searching for Access Points 147
- Manual Setup 149
- Camera Access Point 149
- Configuring the IP Address Settings 150
- Saving the Configuration 150

Selecting a Network Connection 151

Changing Network Settings 152

Browser Remote: Controlling the Camcorder from a Network Device 153
- Setting Up Browser Remote 153
- Starting Browser Remote 153

FTP File Transfer 158
- Preparations 158
- Transferring Clips and Photos 159

Playback via Browser 161

8. Photos 163

Taking Photos 163
- Taking Photos in CAMERA Mode 163
- Capturing Photos in MEDIA Mode 163

Photo Playback 164
- Displaying the [Photos] Index Screen 164
- Viewing Photos 164

Photo Operations 165
- Copying Photos 165
- Deleting Photos 166
- Copying Custom Picture Files 167

9. Additional Information 169

Menu Options 169

Displaying the Status Screens 176

Troubleshooting 185
- List of Messages 189

Handling Precautions 195

Maintenance/Others 198

Optional Accessories 199

Specifications 201

Reference Tables 207

Index 209

Downloaded From camera-usermanual.com Canon Manuals

Downloaded From camera-usermanual.com Canon Manuals

About this Manual

Thank you for purchasing the Canon EOS C100 Mark II. Please read this manual carefully before you use the camcorder and retain it for future reference. Should the camcorder fail to operate correctly, refer to *Troubleshooting* (185).

Conventions Used in this Manual

- IMPORTANT: Precautions related to the camcorder's operation.
- NOTES: Additional topics that complement the basic operating procedures.
- : Reference page number.
- The following terms are used in this manual.
  "Screen" refers to the OLED screen and the viewfinder screen.
  "SD card" refers to an SD, SDHC or SDXC card.
- Photographs in the manual are simulated pictures taken with a still camera. Some screenshots have been altered to make them easier to read.
- Illustrations in the manual show the Canon EOS C100 Mark II camcorder with a Canon EF-S18-55mm f/3.5-5.6 IS II lens attached.

Downloaded From camera-usermanual.com Canon Manuals

The ❯ arrow is used to abbreviate menu selections. For a detailed explanation on how to use the menus, refer to *Using the Menus* (📖 28). For a concise summary of all available menu options and settings, refer to the appendix *Menu Options* (📖 169).

Operating modes

CAMERA indicates that a function is available in the operating mode indicated and CAMERA indicates that the function is not available. For a detailed explanation, refer to *Turning the Camcorder On and Off* (📖 25).

AVCHD MP4 : Indicates the movie format. For details, refer to *Selecting the Movie Format (AVCHD/MP4)* (📖 54).

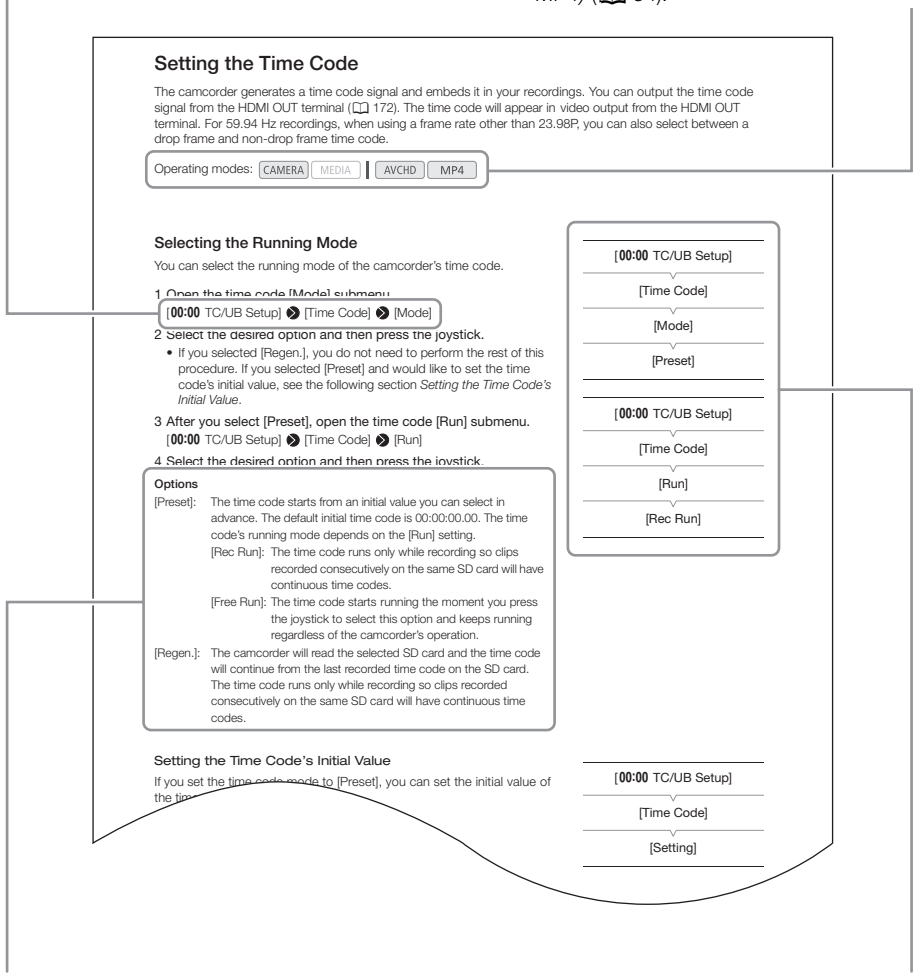

When a procedure requires selecting an option, the available options are listed within or after the procedure. Brackets [ ] are used to refer to menu options as they are displayed on screen.

When a function requires the use of the menu, the quick reference shows the submenus and, when applicable, the default setting for the menu item. The example illustration indicates that you can find the function by selecting the [**00:00** TC/UB Setup] menu and then the [Time Code] menu item.

Downloaded From camera-usermanual.com Canon Manuals

Supplied Accessories

The following accessories are supplied with the camcorder. If you purchased a lens kit, the lens is also supplied.

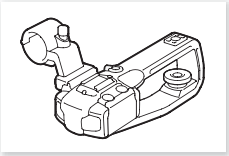

Handle Unit

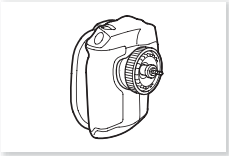

Grip Unit[1]

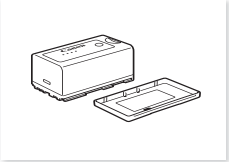

BP-955 Battery Pack
(incl. terminal cover)

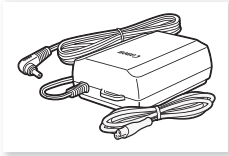

CA-940N[2] or CA-941
Compact Power Adapter
(incl. power cord)

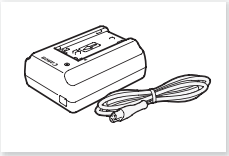

CG-940 Battery Charger
(incl. power cord)

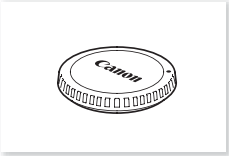

Body Cap[1]

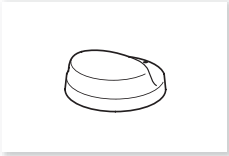

Thumb Rest

Eye Cup

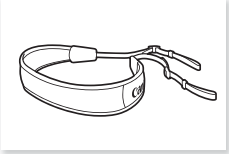

SS-1200 Shoulder Strap

Adapter Base for 0.64 cm (1/4 in.)
Tripods

Tape Measure Hook[1]

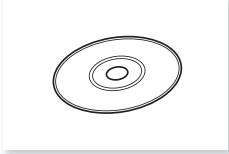

Data Import Utility
Software CD-ROM[3]

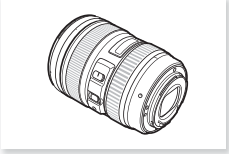

EF24-105mm f/4L IS USM Lens[4]
(incl. lens cap, hood and case)

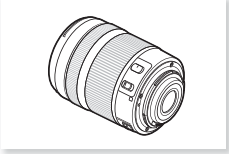

EF-S18-135mm f/3.5-5.6 IS STM
Lens[4] (incl. lens cap)

[1] Comes pre-attached to the camcorder.
[2] Supplied with camcorders sold in the United States, Canada and Mexico only. The CA-941 is supplied with camcorders sold in other regions.
[3] The Data Import Utility Software Guide (PDF file) is included in the CD-ROM. For details about the software, refer to the Software Guide.
[4] Supplied with the respective lens kit. Lens kit availability depends on the region. For more details, visit your local Canon Web site.

Downloaded From camera-usermanual.com Canon Manuals

Names of Parts

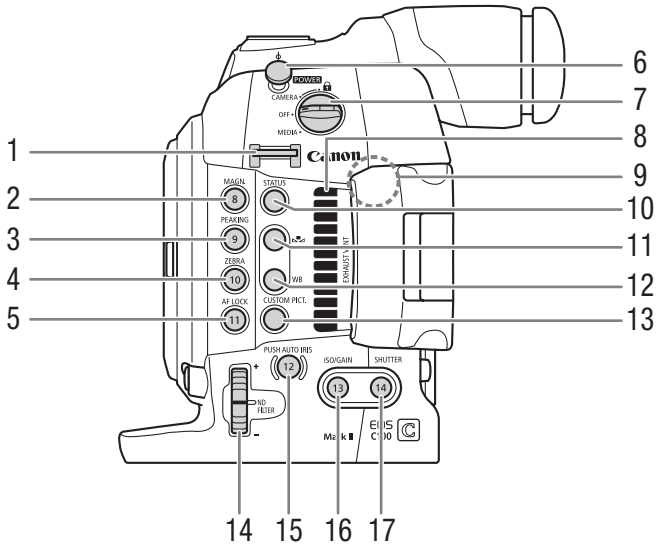

1 Strap mount (📖 39)
2 MAGN. (magnification) button (📖 73)/ Assignable button 8 (📖 107)
3 PEAKING button (📖 72) / Assignable button 9 (📖 107)
4 ZEBRA button (📖 79)/ Assignable button 10 (📖 107)
5 AF LOCK (autofocus lock) button (📖 75)/ Assignable button 11 (📖 107)
6 Tape measure hook
Use the hook to accurately measure the distance from the focal plane.
7 **POWER** switch (📖 25)
8 Exhaust ventilation outlet (📖 52)
9 Wi-Fi antenna (📖 145)
10 STATUS button (📖 176)
11 (white balance adjustment) button (📖 68)
12 WB (white balance) button (📖 68)
13 CUSTOM PICT. (custom picture) button (📖 111)
14 ND FILTER dial (📖 62)
15 PUSH AUTO IRIS (momentary automatic aperture) button (📖 65)/Assignable button 12 (📖 107)
16 ISO/GAIN button (📖 61)/Assignable button 13 (📖 107)
17 SHUTTER button (📖 58)/Assignable button 14 (📖 107)

Downloaded From camera-usermanual.com Canon Manuals

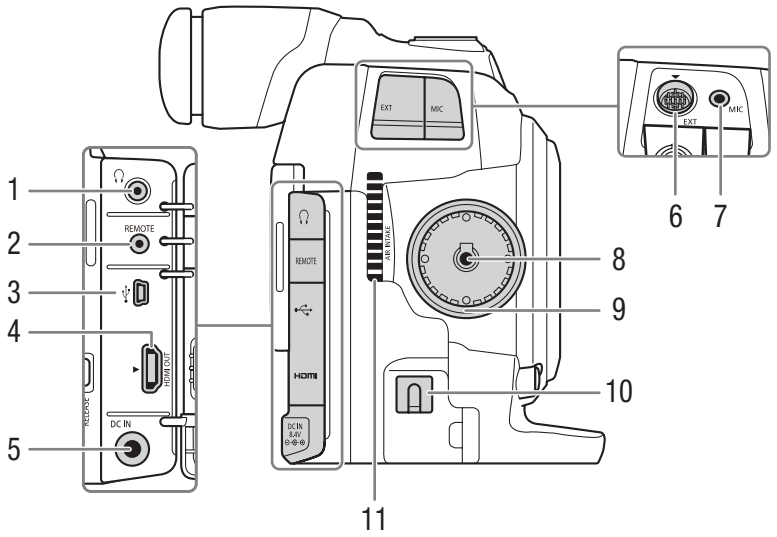

1 ∩ (headphone) terminal (📖 90)
2 REMOTE terminal (📖 105)
For connecting the optional RC-V100 Remote Controller or commercially available remote controllers.
3 ⇐ (USB) terminal (📖 143)
4 HDMI OUT terminal (📖 137)
5 DC IN terminal (📖 25)
6 EXT (modular unit) terminal (📖 34)
7 MIC (microphone) terminal (📖 84)
8 Grip Unit connection terminal (📖 35)
9 Grip Unit attachment thread (📖 35)
10 DC cable clamp (📖 25)
11 Air intake vent (📖 52)

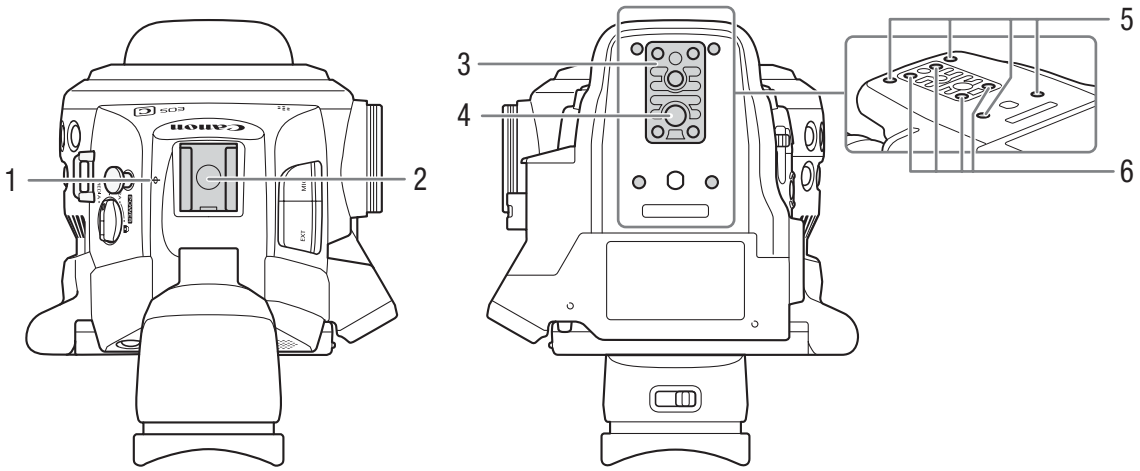

1 ϕ Focal plane mark
2 Accessory shoe with mounting hole for 0.64 cm (1/4 in.) screws
Cold shoe for attaching the supplied handle unit or other accessories, such as the optional VL-10Li II Battery Video Light.
3 TB-1 Tripod Base for tripods with 0.95 cm (3/8 in.) screws (📖 38)
4 Tripod socket (📖 38)
5 Attachment sockets for the optional TA-100 Tripod Adapter (📖 38)
6 Tripod base screws (📖 38)

Downloaded From camera-usermanual.com Canon Manuals

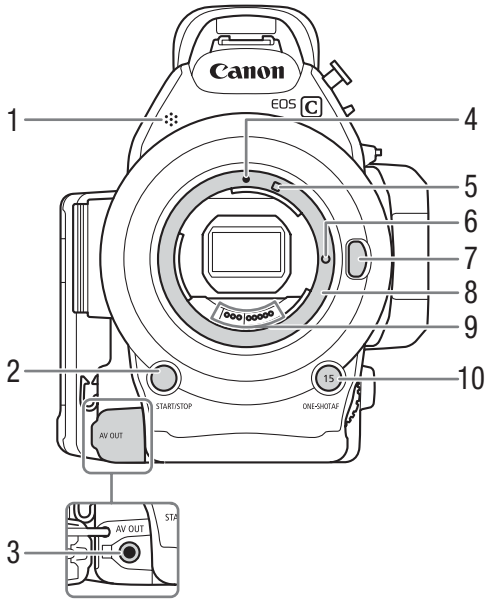

1 Monaural microphone (📖 84)
2 START/STOP button (📖 47)
3 AV OUT terminal (📖 138)
4 EF Lens mount index (📖 31)
5 EF-S Lens mount index (📖 31)
6 EF Lens lock pin (📖 31)
7 Lens release button (📖 32)
8 EF Lens mount (📖 31)
9 EF Lens contacts (📖 31)
10 ONE-SHOT AF (focus automatically once) button (📖 74)/Assignable button 15 (📖 107)

Downloaded From camera-usermanual.com Canon Manuals

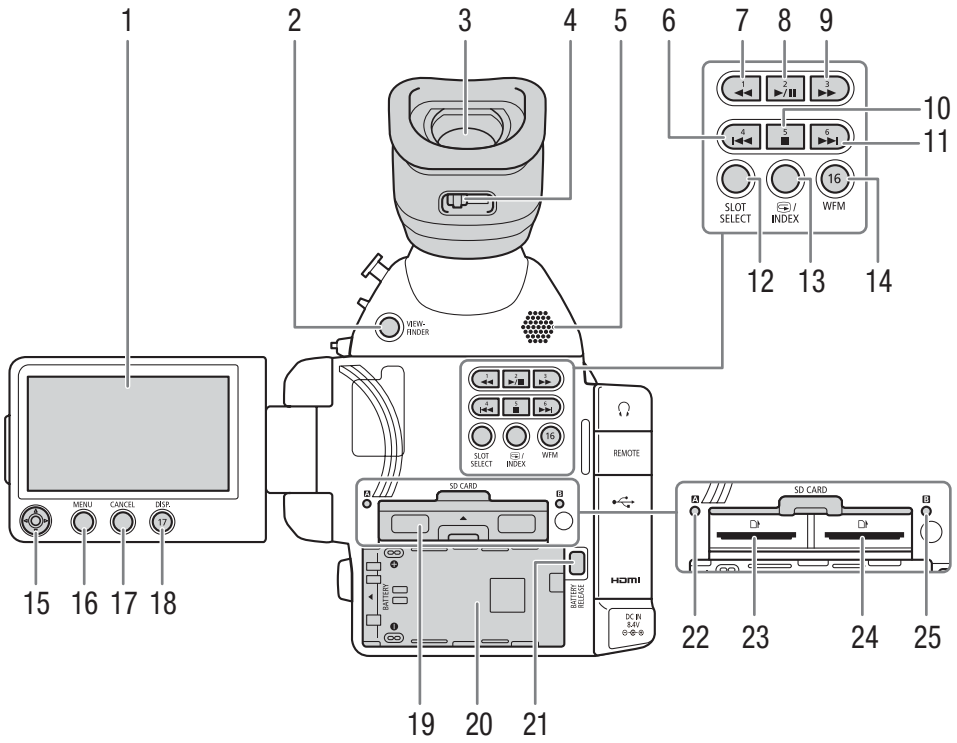

1 OLED screen (📖 37)
2 VIEWFINDER button (📖 36)
3 Viewfinder (📖 36, 37)
4 Dioptric adjustment lever (📖 36)
5 Speaker (📖 129)
6 ⏮ (skip backward) button (📖 129, 164)/ Assignable button 4 (📖 107)
7 ◀◀ (fast reverse playback) button (📖 129)/ Assignable button 1 (📖 107)
8 ▶/❚❚ (play/pause) button (📖 127, 164)/ Assignable button 2 (📖 107)
9 ▶▶ (fast playback) button (📖 129)/ Assignable button 3 (📖 107)
10 ■ (stop) button (📖 127, 164)/ Assignable button 5 (📖 107)
11 ⏭ (skip forward) button (📖 129, 164)/ Assignable button 6 (📖 107)
12 SLOT SELECT (SD card slot selection) button (📖 42, 126)
13 ⟲ (review recording) button (📖 94)/ INDEX button (📖 126)
14 WFM (waveform monitor) button (📖 92)/ Assignable button 16 (📖 107)
15 Joystick (📖 28)
16 MENU button (📖 28)
17 CANCEL button (📖 28)
18 DISP. (display) button (📖 50, 128) /Assignable button 17 (📖 107)
19 SD card compartment cover
20 Battery compartment
21 BATTERY RELEASE button (📖 24)
22 SD card **A** access indicator (📖 41)
23 SD card slot **A** (📖 41)
24 SD card slot **B** (📖 41)
25 SD card **B** access indicator (📖 41)

Downloaded From camera-usermanual.com Canon Manuals

Grip Unit

The grip unit comes originally attached to the camcorder. If the grip unit is removed, use the joystick on the OLED panel to navigate the menus. You can also set the joystick's functions (up/down/left/right/SET) to assignable buttons (📖 107) to be able to change settings that require the joystick*.
When the grip unit is not attached, the control dial (📖 63, 66) and MAGN. button/Assignable button 7 (📖 107) cannot be used to operate the camcorder either.

* Except during photo playback. Functions that require the joystick include all settings in the menus (📖 28, 169), white balance, ISO speed/gain and shutter speed (📖 56), custom picture settings (📖 110), etc.

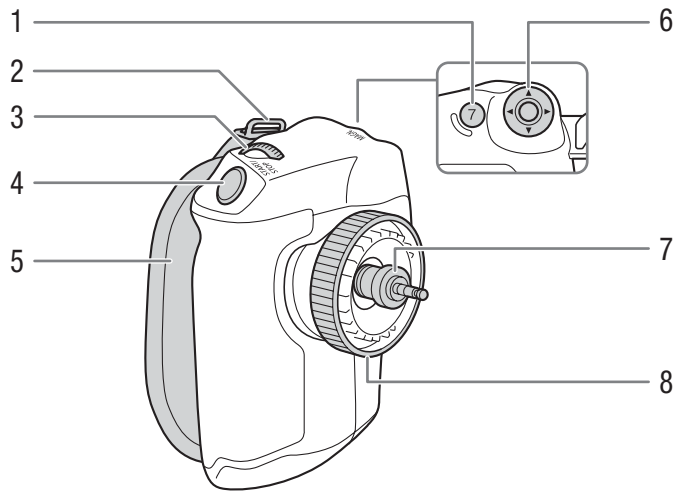

1 MAGN. (magnification) button (📖 73)/ Assignable button 7 (📖 107)
2 Strap mount (📖 39)
3 Control dial (📖 63)
4 START/STOP button (📖 47)
5 Grip belt (📖 35)
6 Joystick (📖 28)
7 Connection plug (📖 35)
8 Lock screw (📖 35)

Downloaded From camera-usermanual.com Canon Manuals

Handle Unit

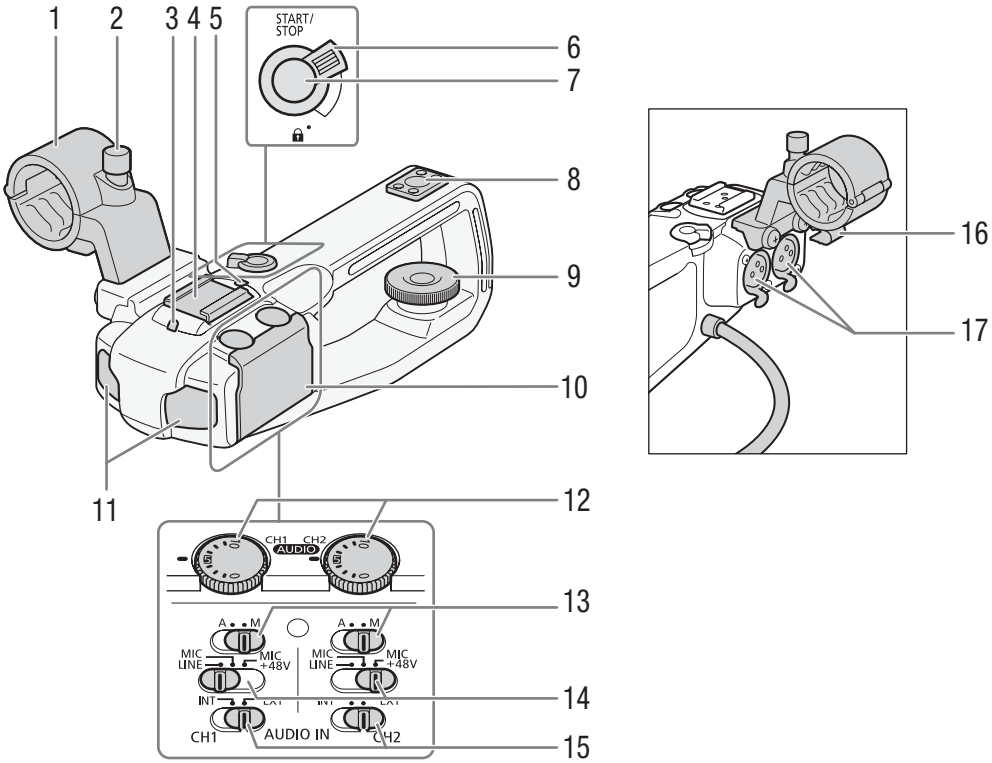

1 Microphone holder (📖 84)
2 Microphone lock screw (📖 84)
3 Front tally lamp (📖 47)
4 Cold accessory shoe
5 Rear tally lamp (📖 47)
6 START/STOP lock (🔒) lever (📖 49)
7 START/STOP button (📖 47)
8 Mounting hole for 0.64 cm (1/4 in.) screws
9 Lock screw (📖 34)
10 Protective cover for audio controls
11 Built-in microphone (📖 85)
12 AUDIO (audio level) dials for CH1 (left) and CH2 (right) (📖 85, 89)
13 Audio level switches for CH1 (left) and CH2 (right) (📖 85, 89)
14 XLR terminal switches for CH1 (left) and CH2 (right) (📖 88)
15 AUDIO IN (audio input selection) switches for CH1 (left) and CH2 (right) (📖 85, 88)
16 Microphone cable clamp (📖 84)
17 XLR terminals CH1 (right) and CH2 (left) (📖 84)

Downloaded From camera-usermanual.com Canon Manuals

EF24-105mm f/4L IS USM Lens (📖 100)

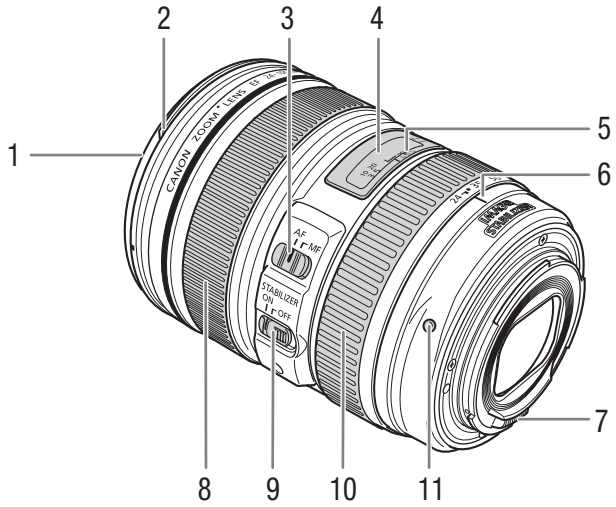

1 Filter mounting thread
2 Hood mount
3 Focus mode switch
4 Distance scale
5 Infrared index
6 Zoom position index
7 Contacts
8 Focusing ring
9 STABILIZER (image stabilizer) switch
10 Zoom ring
11 Lens mount index

EF-S18-135mm f/3.5-5.6 IS STM Lens (📖 100)

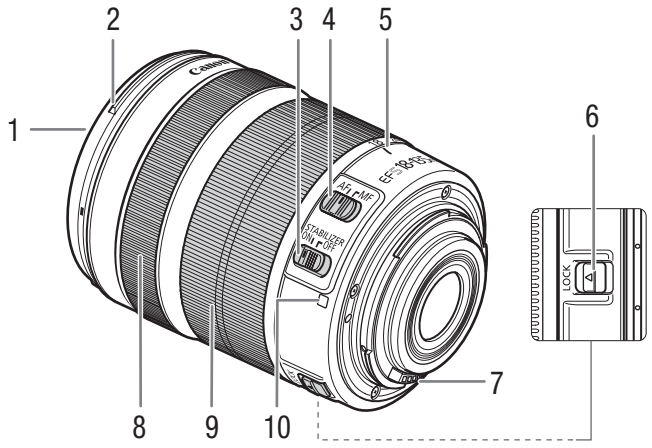

1 Filter mounting thread
2 Hood mount
3 STABILIZER (image stabilizer) switch
4 Focus mode switch
5 Zoom position index
6 Zoom ring lock lever
7 Contacts
8 Focusing ring
9 Zoom ring
10 Lens mount index

Downloaded From camera-usermanual.com Canon Manuals

Preparing the Power Supply

The first time you use the camcorder, charge the battery pack. If you connect the compact power adapter to the camcorder while a battery pack is attached, the camcorder will draw power from the power outlet.
For approximate charging times and recording/playback times with a fully charged battery pack, refer to *Charging Times* and *Recording and Playback Times* (📖 207).

Using a Battery Pack

You can power the camcorder using the supplied BP-955 or an optional BP-950G, BP-970G or BP-975 Battery Pack. The BP-955 and BP-975 are compatible with Intelligent System, meaning that you can check the remaining battery time.

Charging the Battery Pack

Charge battery packs using the supplied CG-940 Battery Charger. Before charging, remove the terminal cover of the battery pack.

1 Connect the power cord to the battery charger.

2 Plug the power cord into a power outlet.

3 Attach the battery pack to the battery charger.

- Press lightly and slide the battery pack in the direction of the arrow until it clicks.
- The CHARGE indicator starts flashing and also indicates the battery pack's approximate charge. The indicator will stay on when charging has completed.

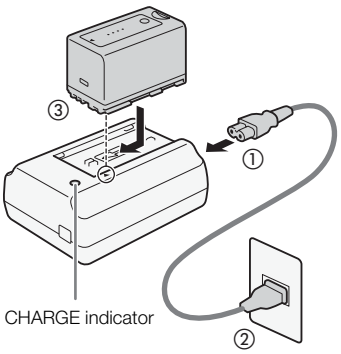

✳ ✳	0-34%: Flashes once per second
✳✳ ✳✳	35-69%: Flashes twice per second
✳✳✳ ✳✳✳	70-99%: Flashes 3 times per second

4 When charging has completed, remove the battery pack from the battery charger.

5 Unplug the power cord from the power outlet and disconnect it from the battery charger.

IMPORTANT

- Do not connect to the battery charger any product that is not expressly recommended for use with this camcorder.
- We recommend charging the battery pack in temperatures between 10 °C and 30 °C. Outside the temperature range of 0 °C to 40 °C, charging will not start.

NOTES

- If there is a malfunction with the battery charger or battery pack, the charge indicator will go out and charging will stop.
- For handling precautions regarding the battery pack, refer to *Battery Pack* (📖 196).
- Charged battery packs continue to discharge naturally. Therefore, charge them on the day of use, or the day before, to ensure a full charge.
- We recommend that you prepare battery packs to last 2 to 3 times longer than you think you might need.

Downloaded From camera-usermanual.com Canon Manuals

- Repeatedly charging and discharging the battery pack will eventually shorten its battery life. You can check the battery life on the [Battery/Hour Meter] status screen (📖 179). Fully charging the battery pack and then discharging it will give you a more accurate reading.

Attaching the Battery Pack

1 Set the **POWER** switch to OFF.

2 Insert the battery pack all the way into the compartment as shown in the illustration and press it gently toward the left until it clicks.

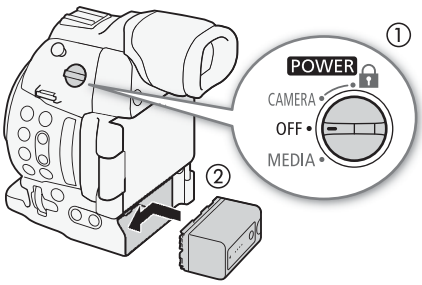

Removing the Battery Pack

1 Set the **POWER** switch to OFF.

2 Press the BATTERY RELEASE button. While holding it down, slide the battery pack toward the right and then pull it out.

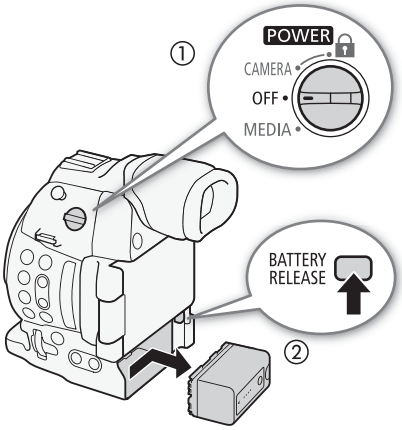

Checking the Remaining Battery Charge

With battery packs compatible with Intelligent System, you can check the estimated remaining usage time of the battery pack by looking at any recording/playback screen or the [Battery/Hour Meter] status screen (📖 179). You can also check the approximate remaining battery charge on the battery pack itself.

Press the CHECK button on the battery pack. An indicator will light for approximately 3 seconds and show the approximate remaining battery charge.

☀ ○ ○ ○	0-25%
☀ ☀ ○ ○	26-50%
☀ ☀ ☀ ○	51-75%
☀ ☀ ☀ ☀	76-100%

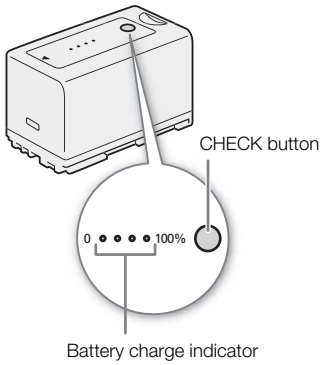

ⓘ NOTES

- The first time you use a battery pack, fully charge it and then use the camcorder until the battery pack is completely exhausted. Doing so will ensure that the remaining recording time will be displayed accurately in the various recording/playback screens.

Downloaded From camera-usermanual.com Canon Manuals

- **USA and Canada only:** The Lithium ion/polymer battery that powers the product is recyclable. Please call 1-800-8-BATTERY for information on how to recycle this battery.

Using a Power Outlet

You can also power the camcorder directly from a power outlet using the supplied compact power adapter.
When using the camcorder with a power outlet, you can change the battery pack while the power is on.

1 Set the POWER switch to OFF.
2 Connect the compact power adapter's DC plug to the DC IN terminal on the camcorder and pass the cable through the DC cable clamp.
3 Connect the power cord to the compact power adapter and plug it into a power outlet.

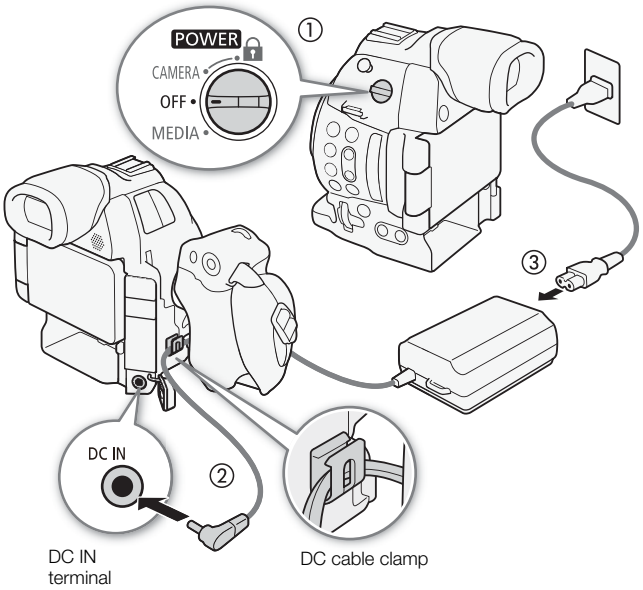

IMPORTANT

- Turn off the camcorder before connecting or disconnecting the compact power adapter.

Turning the Camcorder On and Off

The camcorder has two operating modes: CAMERA (CAMERA) mode for making recordings and MEDIA (MEDIA) mode for playing back recordings. Select the operating mode using the POWER switch.

To turn on the camcorder

Set the POWER switch to CAMERA for CAMERA mode or MEDIA for MEDIA mode.

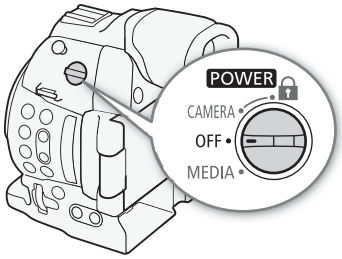

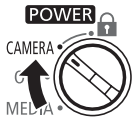

CAMERA mode

MEDIA mode

To turn off the camcorder

Set the POWER switch to OFF.

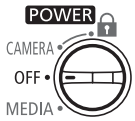

Downloaded From camera-usermanual.com Canon Manuals

Date, Time and Language Settings

Setting the Date and Time

You will need to set the date and time of the camcorder before you can start using it. When the camcorder's clock is not set, the [Date/Time] screen will appear automatically with the first field selected (month or day, depending on the country/region of purchase).

Operating modes: CAMERA MEDIA | AVCHD MP4

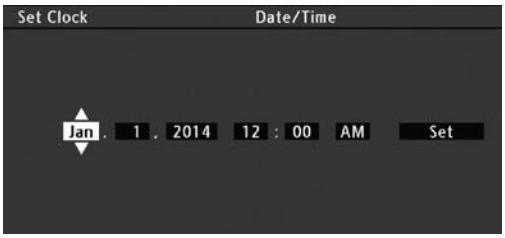

1 Push the joystick up/down to change the month/day then push it right to move to the next field.
- To move to the next field you can also press the joystick itself.

2 Change the rest of the fields in the same way.

3 Select [Set] and then press the joystick to start the clock and close the screen.

NOTES
- You can display the date and time while recording with the [OLED/VF Setup] [Custom Display 2] [Date/Time] setting.
- You can change the date format and the clock format (12/24 hours) with the [Other Functions] [Set Clock] [Date Format] setting.
- You can also change the date and time later on (not during the initial setup) with the [Other Functions] [Set Clock] [Date/Time] setting.
- When the built-in rechargeable lithium battery is exhausted, the date and time setting may be lost. In such case, recharge the built-in lithium battery (197) and set the time zone, date and time again.
- Using the optional GP-E2 GPS Receiver, you can have the camcorder adjust settings automatically according to the UTC date/time information received from the GPS signal (103).

Changing the Time Zone

Change the time zone to match the time zone of your location. The default setting is [UTC-05:00 New York] or [UTC+01:00 Central Europe], depending on the country/region of purchase. The time zones are based on Coordinated Universal Time (UTC).

[Other Functions]
[Time Zone]
[UTC-05:00 New York]
or
[UTC+01:00 Central Europe]*

* Depending on the country/region of purchase.

Operating modes: CAMERA MEDIA | AVCHD MP4

1 Press the MENU button.

2 Push the joystick up/down to select [Other Functions].

3 Select [Time Zone] in a similar fashion.

4 Push the joystick up/down to change the time zone.

5 Press the joystick to set the time zone and then press the MENU button to close the menu.

Downloaded From camera-usermanual.com Canon Manuals

Changing the Language

The default language of the camcorder is English. You can change it to German, Spanish, French, Italian, Polish, Portuguese, Russian, Simplified Chinese, Korean or Japanese. Please note that some settings and screens will be displayed in English, regardless of the language setting.

Operating modes: CAMERA MEDIA | AVCHD MP4

[Other Functions]
[Language]
[English]

1 Press the MENU button.
2 Push the joystick up/down to select [Other Functions].
3 Select [Language] in a similar fashion.
4 Push the joystick up/down to select a language.
5 Press the joystick to change the language and then press the MENU button to close the menu.

Downloaded From camera-usermanual.com Canon Manuals

Using the Menus

In CAMERA mode, many of the camcorder's functions can be adjusted from the menu for general settings, which opens after pressing the MENU button. You can also register frequently used menu settings in a customized submenu (My Menu) for easy access. In MEDIA mode, press the MENU button to open the menu for general settings or press the joystick to open the clip menu for clip operations. For details about the available menu options and settings, refer to *Menu Options* (169).

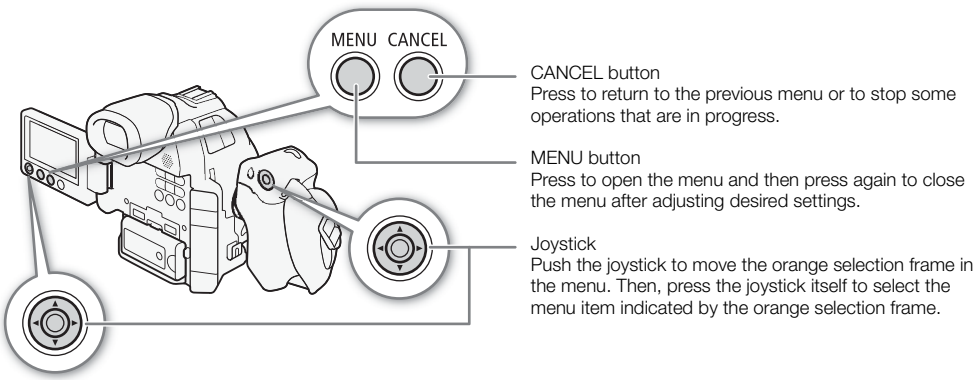

Selecting an Option from the Menu

The following is a step-by-step explanation of how to select an option from the menu. In the procedures throughout the rest of this manual, opening and closing the menu is assumed and not included in the procedure.

Operating modes: CAMERA MEDIA | AVCHD MP4

1 Press the MENU button.
- The menu opens with the orange selection frame indicating the menu item that was selected the previous time the menu was closed (unless the camcorder was turned off).

2 Push the joystick up/down to select the desired submenu.

3 Push the joystick right or press the joystick.
- The orange selection frame will appear on a menu item in the submenu.
- Press the CANCEL button, push the joystick left, or select [↩] to return to the previous submenu.

4 Push the joystick up/down to select the desired menu item.
- If a submenu contains many menu items, a scroll bar will appear on the right side of the submenu indicating that you must scroll up or down to see other menu items.
- A ▶ mark next to a menu item indicates another submenu. Repeat steps 3 and 4.

5 Push the joystick right or press the joystick.
- The orange selection frame will appear on a setting option.
- Press the CANCEL button to return to the previous submenu.

6 Push the joystick up/down to select the desired setting option and then press the joystick.
- Depending on the menu item, additional selections may be necessary.

7 Press the MENU button to close the menu.

NOTES
- Unavailable items may appear grayed out.

Downloaded From camera-usermanual.com Canon Manuals

- Pressing the MENU button at any time closes the menu.
- On some screens, the following icons may be displayed as a guide: SET, MENU, Cancel. They refer, respectively, to pressing the joystick, the MENU button or the CANCEL button.
- When an optional RC-V100 Remote Controller is connected to the camcorder, you can use the remote controller's Up/Down/Left/Right/SET buttons in the same way as the camcorder's joystick. Pressing the SET button is equivalent to pressing the joystick on the camcorder.
- You can check some of the current menu settings on the status screens (📖 176).

Using the Customized Submenu (My Menu)

You can register up to 14 frequently used menu settings under the My Menu submenu for easy access. Furthermore, if you set an assignable button to [My Menu] (📖 107), you can press the button to access your registered menu settings even faster and more easily.

Operating modes: CAMERA MEDIA | AVCHD MP4

Adding Menu Settings

[★ My Menu] > [Edit] > [Register]

1 Open the My Menu [Register] screen.
[★ My Menu] ▶ [Edit] ▶ [Register]
- The menu will change to blue to indicate you are selecting menu settings to add to the My Menu submenu.
- Select [Cancel] to cancel the operation.

2 Navigate the menus to find the menu setting you want to add and then press the joystick.

3 Select [OK] and then press the joystick twice.
- The menu setting you registered will now appear under the [My Menu] submenu.

Rearranging Menu Settings

[★ My Menu] > [Edit] > [Move]

1 Open the My Menu [Move] screen.
[★ My Menu] ▶ [Edit] ▶ [Move]

2 Push the joystick up/down to select the setting you want to move and then press the joystick.
- An orange ⇕ icon will appear next to the setting you selected to move.

3 Push the joystick up/down to move the setting to the desired position and then press the joystick.

Removing Menu Settings

[★ My Menu] > [Edit] > [Delete]

1 Open the My Menu [Delete] screen.
[★ My Menu] ▶ [Edit] ▶ [Delete]

2 Push the joystick up/down to select the setting you want to remove and then press the joystick.

3 Select [OK] and then press the joystick twice.

Downloaded From camera-usermanual.com Canon Manuals

Resetting the My Menu Submenu

1 Reset all the menu settings registered to the My Menu submenu.
[★ My Menu] ❯ [Edit] ❯ [Reset All]

2 Select [OK] and then press the joystick twice.

[★ My Menu]

[Edit]

[Reset All]

Downloaded From camera-usermanual.com Canon Manuals

Preparing the Camcorder

This section outlines the basic preparations for the camcorder such as attaching a lens and attaching the modular units (handle unit, grip unit, etc.) to the camcorder. The modular units extend the camcorder's functionality so you can choose the configuration that best fits your needs and shooting conditions.

Preparing the Lens

As much as possible, attach and remove the lens quickly and in a clean environment free of dust. Refer also to the instruction manual of the lens used. For details on using the EF24-105mm f/4L IS USM lens or EF-S18-135mm f/3.5-5.6 IS STM lens, refer to *Using the EF24-105mm f/4L IS USM and EF-S18-135mm f/3.5-5.6 IS STM Lenses* (100).

IMPORTANT

- When attaching/removing a lens, avoid direct sunlight or strong light sources. Also, be careful not to drop the camcorder or lens.
- If the contacts get soiled, scratched, or have fingerprints on them, corrosion or faulty connections can result. The camcorder and lens may not operate properly.
- The lens mount of the EF24-105mm f/4L IS USM lens has a rubber ring for enhanced water- and dust-resistance. The rubber ring may cause slight abrasions around the camcorder's lens mount, but this will not cause any problems. If the rubber ring becomes worn, it is replaceable by a Canon Service Center for a fee.

NOTES

- Be careful not to touch the lens mount or any components inside the lens mount area.
- Replace the body cap to the lens mount immediately after removing the lens from the camcorder.
- Keep the body cap clean and free from dust or dirt particles.

Attaching an EF Lens

1 Set the POWER switch to OFF.

2 Remove the body cap from the camcorder and any dust caps from the lens.

3 Attach the lens to the camcorder and turn the lens in the direction of the arrow until it clicks in place.
   - EF lenses: Align the red mark on the lens with the red EF Lens mount index mark on the camcorder.
   - EF-S lenses: Align the white mark on the lens with the white EF-S Lens mount index mark on the camcorder.

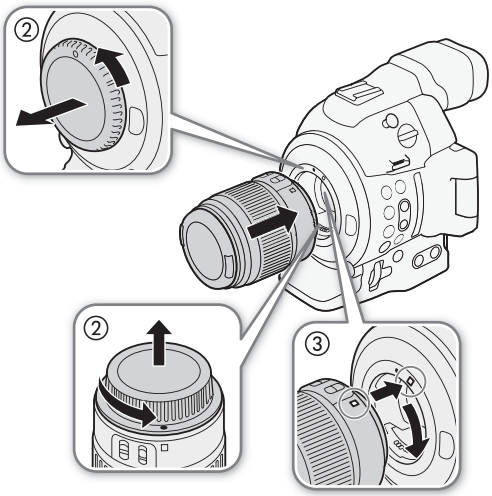

NOTES

- Turning on the image stabilization function of an EF lens may reduce the effective usage time of the battery pack. When image stabilization is not necessary, for example if the camcorder is fixed to a tripod, it is recommended to turn it off.
- Depending on the lens used, you may experience one or more of the following limitations.
  - The lens model name may be shortened when displayed on the screen.
  - You may not be able to focus manually when the focus mode switch is set to AF.
  - You may not be able to use the focus preset function (super telephoto lenses).
  - You may not be able to use the power zoom function of the lens.

Downloaded From camera-usermanual.com Canon Manuals

- When an EF 40mm f/2.8 STM lens is attached to the camcorder and the focus mode is set to AF, you can have the lens retract automatically when the camcorder's power is turned off (📖 121)

Removing an EF Lens

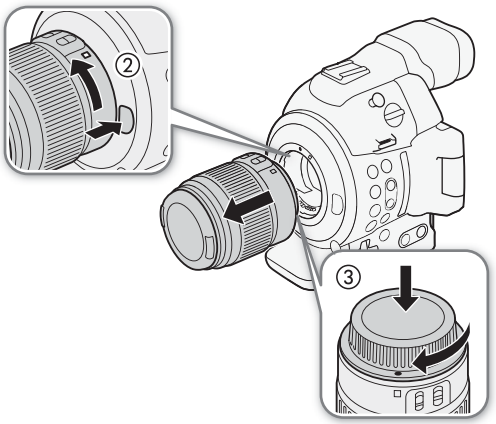

1 Set the POWER switch to OFF.
2 Hold down the lens release button and turn the lens all the way in the direction of the arrow until it stops.
3 Remove the lens and replace the body cap to the camcorder and the dust cap to the lens.

Peripheral Illumination Correction

Depending on the characteristics of the lens used, the image around the corners of the picture may seem darker due to light fall-off or peripheral illumination drop. If the camcorder has correction data available for the EF lens used, it can apply this correction data to compensate as necessary.

Operating modes: CAMERA MEDIA | AVCHD MP4

1 Attach the lens you want to use.
2 Open the peripheral illumination correction screen.
[Camera Setup] ▶ [Periph. Illum. Corr.]
- If correction data is available, the lens model name will appear on the screen.
- If correction data is not available, [Periph. Illum. Corr.] will appear grayed out. Visit your local Canon Web site and check if there is correction data available for the lens you are using. If so, download the necessary update package and upgrade the camcorder's firmware following the instructions supplied therein.

3 Select [On] and then press the joystick.
- As long as [Camera Setup] ▶ [Periph. Illum. Corr.] is set to [On], the camcorder will automatically apply the appropriate correction data.

[Camera Setup]
[Periph. Illum. Corr.]
[Off]

Correction for EF-S Lenses

The peripheral illumination fall-off may be more pronounced with EF-S lenses than with EF lenses. To prevent this, when you use an EF-S lens, you can change the sensor area that is used for producing the image.

Operating modes: CAMERA MEDIA | AVCHD MP4

1 Open the [EF-S Lens] submenu.
[Camera Setup] ▶ [EF-S Lens]
2 Select [On] and then press the joystick.
- EF-S will appear at the lower center of the screen.
- When [EF-S Lens] is set to [On], the image is enlarged digitally by a factor of approximately 1.04x, slightly affecting the image quality. In most cases, using the default [Off] setting is recommended.

[Camera Setup]
[EF-S Lens]
[Off]

Downloaded From camera-usermanual.com Canon Manuals

NOTES

- No correction will be applied in the following cases:
  - When correction data is not available for the attached lens.
  - When using non-Canon lenses. Even if the [Periph. Illum. Corr.] setting is available (not grayed out), setting it to [Off] is recommended.
- **About lens correction data:**
  - The camcorder contains a register of correction data for most compatible lenses that were available at the time the camcorder went on sale. Correction data for future lenses will be made available as part of the regular updates released for the camcorder's firmware. For more details, visit your local Canon Web site.
  - Depending on the recording conditions, noise may appear in the periphery of the image as a result of the correction.
  - The level of correction will be lower for lenses that cannot provide distance information.
  - The level of correction will be lower the higher the ISO speed/gain setting used.

Updating the Firmware of an EF Lens

You can update the lens firmware of an EF lens attached to the camcorder. For details about firmware updates for EF lenses, visit your local Canon Web site.

Operating modes: CAMERA MEDIA | AVCHD MP4

[Other Functions]

[Lens Firmware]

1 Download the lens firmware update file from the Canon Web site and save it on an SD card. Insert the SD card containing the lens firmware update into SD card slot A.

2 Attach to the camcorder the lens you wish to update and open the [Lens Firmware] submenu.

[Other Functions] [Lens Firmware]

- The current lens firmware version will appear on the screen.
- If the [Lens Firmware] submenu is grayed out, the attached lens may not support firmware updates or the SD card used may not contain a valid lens firmware file.

3 Select [OK] and then press the joystick.

4 Select the lens firmware file (file extension .LFU) and then press the joystick.

5 When the update has finished, select [OK] and then press the joystick.

- The lens firmware will be updated. Once in progress, the lens firmware update cannot be canceled.

6 When the confirmation message appears, press the joystick.

IMPORTANT

- Be sure to observe the following precautions while the lens firmware is being updated.
  - Do not disconnect the power source or turn off the camcorder.
  - Do not remove the lens.
  - Do not operate any buttons or controls on the camcorder.
  - Do not open the SD card compartment cover and do not remove the SD cards.

NOTES

- The lens firmware cannot be updated while pre-recording is activated.
- We recommend that you power the camcorder from a power outlet using the compact power adapter or use a sufficiently charged battery pack.
- When using an optional EF Extender, remove the Extender before performing the procedure.

Downloaded From camera-usermanual.com Canon Manuals

Configuring the Modular Units

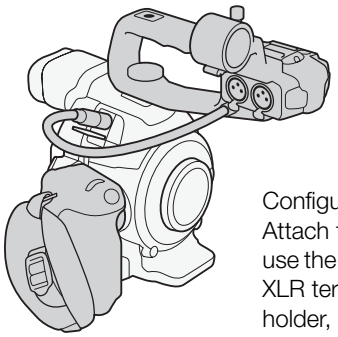

Configuration with handle: Attach the handle unit to use the built-in microphone, XLR terminals, microphone holder, etc. (84).

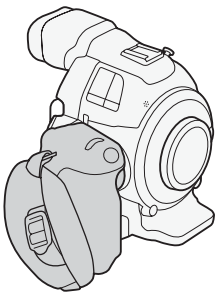

Light configuration with grip for hand-held shooting.

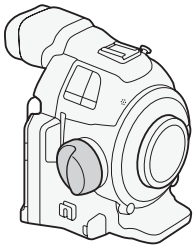

Minimal configuration with thumb rest.

Attaching and Removing the Handle Unit

The handle unit extends the camcorder's audio capabilities, adding XLR terminals as well as a built-in stereo microphone.

Attaching the Handle Unit

1 Set the POWER switch to OFF.

2 Insert the attachment base at the bottom of the handle unit to the camcorder's accessory shoe.

3 Tighten the handle unit's lock screw while gently pressing it down.

4 Connect the handle unit's cable to the camcorder's EXT terminal, aligning the ▲ marks.

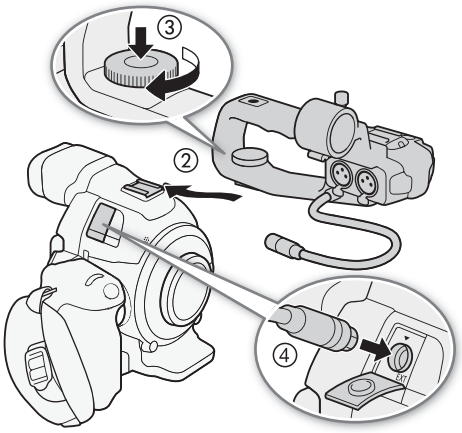

Removing the Handle Unit

1 Set the POWER switch to OFF.

2 Disconnect the handle unit's cable.

- Pull back the metallic tip of the cable to release the cable and then disconnect the cable from the terminal.

3 Loosen the handle unit's lock screw and gently slide out the handle unit from the accessory shoe.

NOTES

- You can use the accessory shoe or the socket for 0.64 cm (1/4 in.) screws on the handle unit to attach a variety of commercially available accessories.

Downloaded From camera-usermanual.com Canon Manuals

Removing and Attaching the Grip Unit

The grip unit comes originally attached to the camcorder. You can remove it and replace it with the thumb rest should the minimal configuration be necessary. While the grip unit is not attached, you will not be able to use the control dial and MAGN. button/assignable button 7.

Removing the Grip Unit

1 Set the POWER switch to OFF.

2 Unscrew the grip unit's lock screw and gently detach the grip unit.
- The grip unit contains an internal connection cable so be sure not to pull it too forcefully.

3 Disconnect the grip unit's connection plug.

4 Screw the thumb rest onto the camcorder.

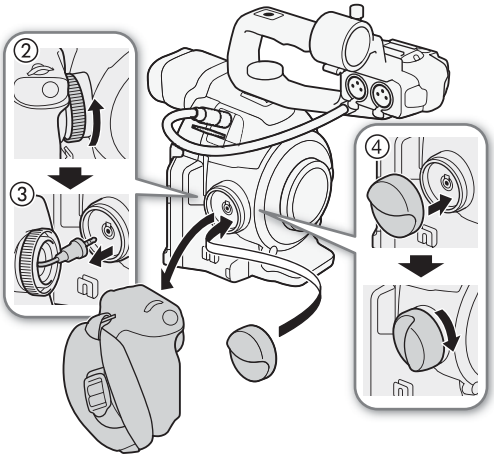

Attaching the Grip Unit

The grip unit can be attached in any of 24 positions (at 15° intervals) to give you a convenient grip angle for high- and low-angle shooting.

1 Set the POWER switch to OFF.

2 Unscrew the thumb rest and remove it from the camcorder.

3 Firmly insert the grip unit's plug all the way into the grip unit connection terminal on the camcorder.
- Make sure to insert the plug all the way in, until the white line around the terminal is not visible.
- If the plug is not correctly connected (for example, if the white line around the terminal is partly visible), all the controls on the camcorder may be disabled.

4 Attach the grip unit to the camcorder aligning it at the desired angle and tighten the grip unit's lock screw.

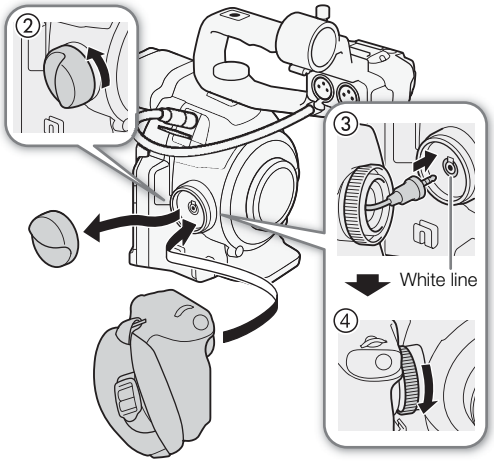

Adjusting the Grip Belt

Adjust the grip belt so that you can reach the START/STOP button on the grip unit with your index finger but still have a comfortable but secure grip.

IMPORTANT

- Be careful not to drop the camcorder when adjusting the grip belt.

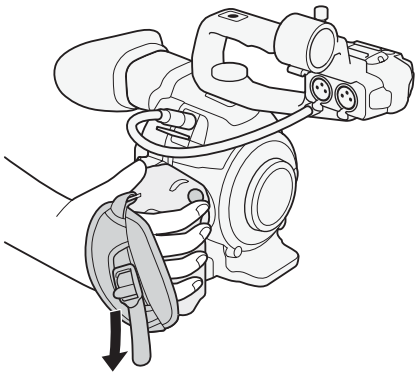

Downloaded From camera-usermanual.com Canon Manuals

Using the Viewfinder

Adjusting the Viewfinder

1 Adjust the viewfinder's angle as necessary.
- The viewfinder's angle can be adjusted up to 68°.

2 Turn on the camcorder and adjust the dioptric adjustment lever.
- You can press the VIEWFINDER button to turn the viewfinder on and off.

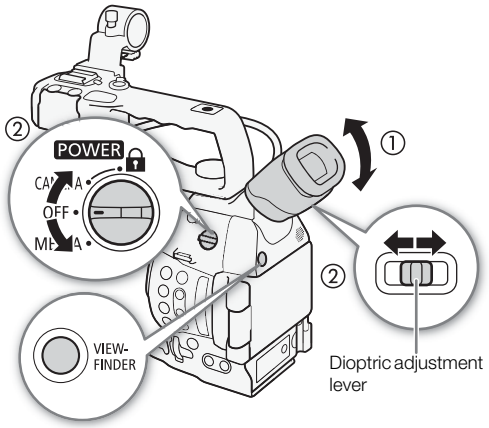

Attaching and Detaching the Eye Cup

Attach the eye cup so that it covers the rubber portion of the viewfinder unit.
- The dioptric adjustment lever can be operated even with the eye cup attached.
- For left eye use, attach the eye cup so that the protruding portion faces the opposite side.

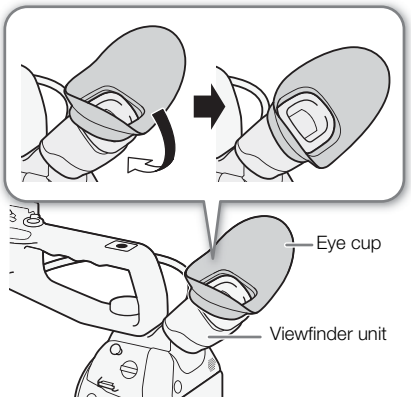

Detach the eye cup as shown in the illustration.

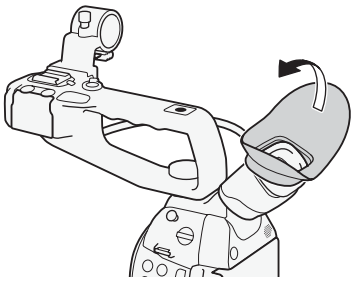

Downloaded From camera-usermanual.com Canon Manuals

Using the OLED Panel

1 Pull the OLED panel 180 degrees to the left.
- The OLED panel can be pulled to the left 270 degrees so that the screen can be viewed from the side.

2 Push the OLED panel up or down to adjust it to the desired angle of view.

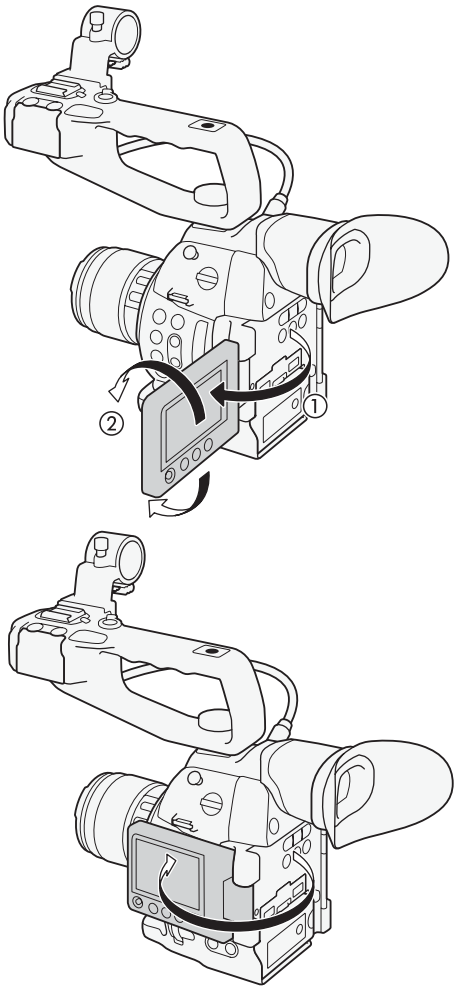

NOTES

- If you are not using the viewfinder during a long recording, we recommend turning it off.
- While recording with the OLED panel facing toward the subject, you can set [OLED/VF Setup] [OLED Mirror Image] to [On] to flip the image horizontally so subjects can see a mirror image of themselves.
- To set the screen to black & white, use the [OLED/VF Setup] [OLED/VF B&W] setting. If you set an assignable button to [OLED/VF B&W] (107), you can press the button to turn the black & white display on and off. When the screen is black & white, the onscreen displays will still be in color.
- When you use a commercially available lens adapter and the image on the screen is inverted, you can use the [Other Functions] [Custom Function] [Scan Reverse Rec] setting to return the image to the correct orientation.
- **About the OLED and viewfinder screens:** The screens are produced using extremely high-precision manufacturing techniques, with more than 99.99% of the pixels operating to specification. Less than 0.01% of the pixels may occasionally misfire. On the viewfinder screen only, pixels may also light up as white dots. This has no effect on the recorded image and does not constitute a malfunction.

Adjusting the Viewfinder/OLED Screen

You can adjust the brightness, contrast, color and sharpness of the viewfinder and OLED screen independently of each other. Additionally, you can turn on the increased luminence of the OLED panel or adjust the backlight of the viewfinder. These adjustments will not affect your recordings.

Operating modes: CAMERA MEDIA | AVCHD MP4

1 Open the setup menu for the viewfinder or OLED screen.
[OLED/VF Setup] [OLED Setup] or [Viewfinder Setup]

2 Select [Brightness], [Contrast], [Color], [Sharpness], [Luminance] or [Backlight] and then press the joystick.

3 Adjust the setting and then press the joystick.
- Repeat steps 2 and 3 to adjust other settings as necessary.

[OLED/VF Setup]

[OLED Setup]
[Viewfinder Setup]

[Brightness: ±0]
[Contrast: ±0]
[Color: ±0]
[Sharpness: 2]
[Luminance: Off]*
[Backlight: Normal]**

* [OLED Setup] only
**[Viewfinder Setup] only

Downloaded From camera-usermanual.com Canon Manuals

NOTES

- If you set an assignable button to [OLED Setup] or [Viewfinder Setup] (107), you can press the button to open the respective submenu.
- You can also press the DISP. button and hold it pressed for about 3 seconds to turn the OLED [Luminance] setting on and off.

Adjusting the Color Balance of the OLED Screen

As times passes, the color balance of the OLED screen may change gradually. You can adjust the color balance of the OLED screen to compensate for this change.

[OLED/VF Setup] > [OLED Setup] > [Color Balance] > [R-B Simult. Adjust: ±0] [R Fine Tuning: ±0] [B Fine Tuning: ±0]

1 Open the [Color Balance] submenu.
[OLED/VF Setup] > [OLED Setup] > [Color Balance]
2 Select [R-B Simult. Adjust.] and then press the joystick.
3 Change the setting to adjust the red and blue levels simultaneously and then press the joystick.
4 If necessary, select [R Fine Tuning] or [B Fine Tuning] to further adjust only the red or blue level.
5 Adjust the setting as necessary and then press the joystick.

Using a Tripod

The camcorder is shipped with the TB-1 Tripod Base for tripods with 0.95 cm (3/8 in.) screws. You can mount the camcorder on a tripod but do not use tripods with mounting screws longer than 5.5 mm (0.2 in.) as this may cause damage to the camcorder.

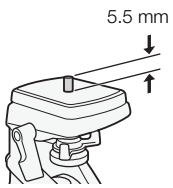

Using a Tripod with 0.64 cm (1/4 in.) Mounting Screws

To use a tripod with 0.64 cm (1/4 in.) mounting screws, first attach the supplied tripod adapter base to the camcorder and then attach the tripod to the adapter base.

1 Remove the original TB-1 Tripod Base from the camcorder.
- Remove the 4 screws and then remove the base.

2 Attach the supplied tripod adapter base for 0.64 cm (1/4 in.) tripods.
- Firmly screw in the 4 screws.

3 Attach the tripod.
- Firmly screw in the tripod screw.

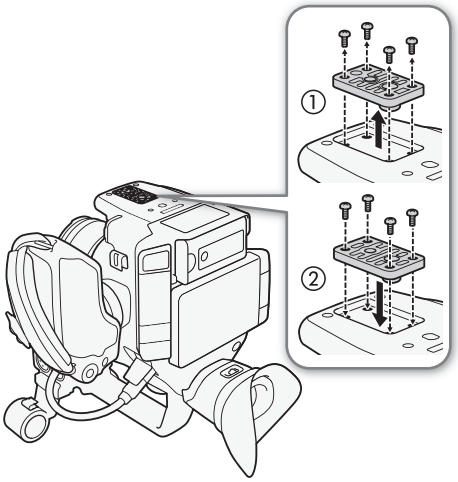

Downloaded From camera-usermanual.com Canon Manuals

Attaching a Shoulder Strap

Pass the ends through the strap mount and adjust the length of the strap.

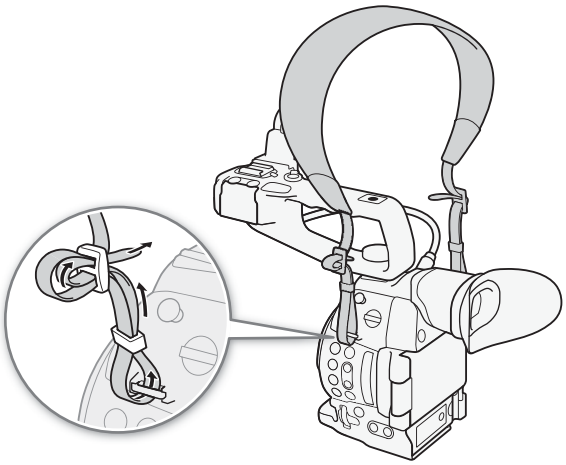

IMPORTANT

- Be careful not to drop the camcorder when attaching or adjusting the shoulder strap.

Removing and Attaching the Terminal Covers

You can remove the covers of the camcorder's terminals to access them more easily.

Removing the Terminal Covers

Open the terminal cover and gently pull it straight out.

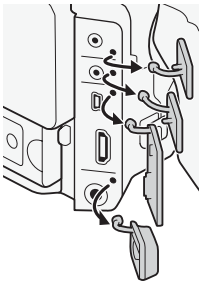

Attaching the Terminal Covers

Insert the connecting strip into the opening to attach the terminal cover.

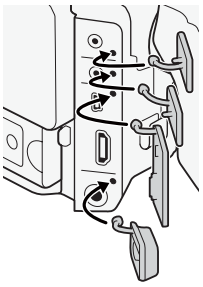

NOTES

- If the connecting strip is difficult to grasp, use a pair of tweezers or similar tool.

Downloaded From camera-usermanual.com Canon Manuals

Using an SD Card

SD Cards Compatible for Use with the Camcorder

You can use commercially available Secure Digital (SD) cards with this to save clips, photos, custom picture files and camera setting files. Initialize SD cards (📖 42) when you use them with this camcorder for the first time.

Compatible SD Cards

As of October 2014, the recording function has been tested using memory cards made by Panasonic, Toshiba and SanDisk. For details about SD cards tested for use with this camcorder, visit your local Canon Web site.

Memory card type:	SD card, SDHC card, SDXC card
SD Speed Class*:	CLASS 4, CLASS 6, CLASS 10

* SD Speed Class is a standard that indicates the minimum guaranteed data transfer of SD cards. To record MP4 clips with a bit rate of 35 Mbps, we recommend using SD cards rated CLASS 6 or 10. If you plan to record using slow & fast recording, we recommend using SD cards rated SD speed class 10.

IMPORTANT

- After repeatedly recording, deleting and editing clips (fragmented memory), it will take longer to write data on the SD card and recording may stop. Save your recordings and initialize the SD card in the camcorder using the [Complete] initialization option.

SDXC Cards

You can use SDXC cards with this camcorder. When using SDXC cards with other devices, such as digital recorders, computers and card readers, **make sure that the external device is compatible with SDXC cards**. For information on compatibility, contact the computer, operating system or card manufacturer.

IMPORTANT

- If you use an SDXC card with a computer OS that is not SDXC-compatible, you may be prompted to format the card. In such case, **cancel the operation to prevent data loss**.

NOTES

- Proper operation cannot be guaranteed for all SD cards.

Downloaded From camera-usermanual.com Canon Manuals

Inserting and Removing an SD Card

The camcorder is equipped with two SD card slots.

1 Turn off the camcorder.

2 Open the OLED panel and then open the SD card compartment cover.

3 Insert the SD card straight, with the label facing up, all the way into the SD card slot until it clicks.

4 Close the SD card compartment cover.

- Do not force the cover closed if the SD card is not correctly inserted.

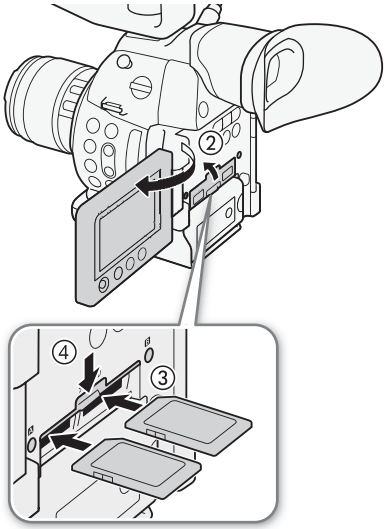

Checking the Status of the SD Card Slots

You can check the status of the SD card slots immediately by looking at the SD card A/SD card B access indicator. Refer to the following table.

Access indicator color	SD card slot status
Red	Accessing the SD card.
Green	Recording/playback is possible and the SD card slot is selected for recording/playback.
Indicator off	An SD card is not inserted, the SD card slot is not currently selected, or the SD card is not being accessed.

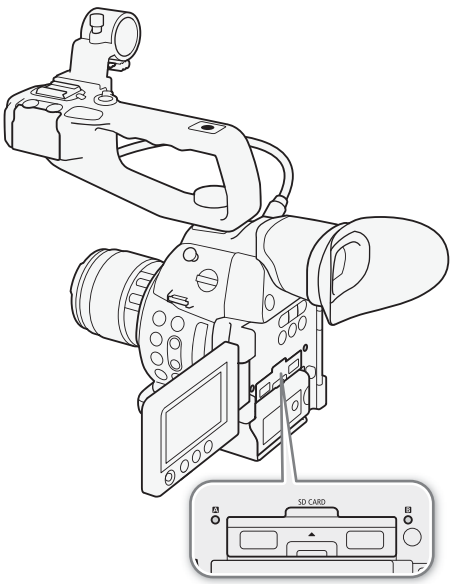

IMPORTANT

- Observe the following precautions while either of the SD card access indicators is illuminated in red. Failure to do so may result in permanent data loss.
  - Do not disconnect the power source or turn off the camcorder.
  - Do not open the SD card compartment cover and do not remove the SD cards.
- Turn off the camcorder before inserting or removing an SD card. Inserting or removing the SD card with the camcorder on may result in permanent data loss.
- SD cards have front and back sides that are not interchangeable. Inserting an SD card facing the wrong direction can cause a malfunction of the camcorder. Be sure to insert the SD card as described in step 3.

NOTES

- **To remove the SD card:** Push the SD card once to release it. When the SD card springs out, pull it all the way out.
- If you set the [Other Functions] [Media Access LED] function to [Off], the access indicators will not illuminate.

Downloaded From camera-usermanual.com Canon Manuals

Initializing an SD Card

The first time you use an SD card with this camcorder, initialize it first. You can also initialize an SD card to permanently delete all the data it contains.

When initializing an SD card, you can select quick initialization, which clears the file allocation table but does not physically erase the stored data, or complete initialization, which deletes all data completely.

Operating modes: CAMERA MEDIA | AVCHD MP4

1 Open the [Initialize Media] submenu.
[Other Functions] [Initialize Media]

[Other Functions]
[Initialize Media]

2 Select [SD A] or [SD B] and then press the joystick.

3 Select [Complete] (complete initialization) or [Quick] (quick initialization) and then press the joystick.

4 Select [OK] and then press the joystick.
- If you are using the [Complete] initialization option, press the joystick twice to cancel the operation while it is in progress. You can use the SD card but all data will be erased.

5 When the confirmation message appears, press the joystick.
- The SD card is initialized and all the data it contains is erased.

IMPORTANT
- Initializing an SD card will permanently erase all data, including custom picture files. Lost data cannot be recovered. Make sure you save important recordings in advance.
- Depending on the SD card, the complete initialization may take up to a few minutes.

NOTES
- If you set an assignable button to [Initialize Media] (107), you can press the button to open the initialization submenu.

Switching Between the SD Card Slots

The camcorder features two SD card slots, SD card slot A and SD card slot B. If both slots contain an SD card, you can switch between them as necessary.

Operating modes: CAMERA MEDIA | AVCHD MP4

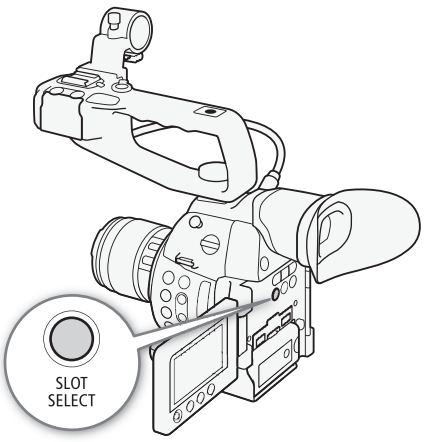

Press the SLOT SELECT button.
- The access indicator of the selected SD card slot will illuminate in green. On the screen, the SD card selected is indicated with a ▶ mark next to the SD card icon.

NOTES
- You cannot use the SLOT SELECT button to switch between SD card slots while recording.
- The SD card slot selected for recording will be used to record both clips and photos.
- While using the Browser Remote application, you can also switch between SD card slots remotely by pressing [SLOT SELECT] on the Browser Remote screen (153).

Downloaded From camera-usermanual.com Canon Manuals

Relay Recording and Double Slot Recording

The camcorder features two useful SD card recording methods, relay recording and double slot recording.

Relay recording: This allows you to continue recording on another SD card if the SD card you are using becomes full. Relay recording is available from SD card slot A to SD card slot B, and vice versa.

Double slot recording: This records the same clip simultaneously to both SD cards, which is a convenient way to make a backup copy of your recording while you record.

Operating modes: CAMERA MEDIA | AVCHD MP4

To use relay recording

By default, this function is activated. If it has been deactivated, follow the procedure below to activate it.

1 Open the [Relay Rec] submenu.
[Other Functions] [Relay Recording]

2 Select [On] and then press the joystick.

[Other Functions]
[Relay Recording]
[On]

To use double slot recording

1 Open the [Double Slot Rec] submenu.
[Other Functions] [Double Slot Recording]

2 Select the desired option and then press the joystick.
- will appear on the top of the screen. and the remaining recording time for double slot recording will appear on the left of the screen.

[Other Functions]
[Double Slot Recording]
[Off]

Options

[On]:	Records the clip to both SD cards. Both clips use the same video configuration.
[MP4 (4 Mbps)]:	Records the clip to both SD cards. The second clip (the one recorded to the SD card that is not selected) is recorded in MP4 at 4 Mbps with a resolution of 1280x720.
[MP4 (3 Mbps)]:	The second clip is recorded in MP4 at 3 Mbps with a resolution of 640x360.
[Off]:	Deactivates double slot recording.

NOTES

- [MP4 (4 Mbps)] and [MP4 (3 Mbps)] are not available for AVCHD clips at 28 Mbps or MP4 clips at 35 Mbps.
- If an SD card becomes full during double slot recording, recording on both SD cards will stop. On the other hand, if an error occurs with one of the SD cards, recording will continue on the other SD card.
- Double slot recording cannot be used with relay recording or slow & fast motion recording. While double slot recording is activated, you cannot use the [Other Functions] [Delete Last Clip] setting to delete the last clip recorded.

Checking the Remaining Recording Time on the SD Card

When the camcorder is in CAMERA mode, the display on the upper left of the screen indicates which SD card slot is in use and the available recording time (in minutes*) that remains on each SD card.
On the [Media] status screen (📖 178), you can check the total space, SD speed class, used space, available recording time** and available number of photos on each of the SD cards.

* The approximate available recording time is based on the current bit rate (📖 54).
**The available recording time will appear on the status screen only in CAMERA mode.

Downloaded From camera-usermanual.com Canon Manuals

Recovering Data on an SD Card

Some actions, such as suddenly turning off the camcorder or removing the SD card while data is being recorded, can cause data errors on the SD card. In such case, you may be able to recover the data on the SD card. You will be prompted to recover data when you insert an SD card with a data error into the camcorder or when trying to play back an MP4 clip that has a data error.

Operating modes: CAMERA MEDIA | AVCHD MP4

1 When the screen prompts you to recover the data, select [OK] and then press the joystick.

2 When the confirmation message appears, press the joystick.

NOTES

- In some cases, data may not be recovered, such as when the file system is corrupted or the SD card is physically damaged.

Downloaded From camera-usermanual.com Canon Manuals

Adjusting the Black Balance

You can have the camcorder adjust the black balance automatically when ambient temperature changes considerably or if there is a noticeable change in a true black video signal.

Operating modes: CAMERA MEDIA | AVCHD MP4

[Camera Setup]

[ABB]

1 Open the [ABB] screen.
[Camera Setup] [ABB]

2 Attach the body cap to the lens mount.
- If a lens was attached, remove the lens and replace the body cap.

3 Select [OK] and then press the joystick.
- The automatic black balance procedure will start.

4 When the confirmation message appears, press the joystick.
- If the body cap is not correctly attached, [Error] will appear on the screen. Press the joystick and repeat the procedure from the beginning.

NOTES

- Adjusting the black balance may be necessary in the following cases:
  - When using the camcorder for the very first time or after a long period of not using it.
  - After sudden or extreme changes in ambient temperature.
  - After changing the ISO speed/gain settings.
- The automatic black balance procedure will take approximately 40 seconds when the frame rate is set to 23.98P.
- During the adjustment of the black balance, you may notice some irregular displays appear on the screen. This is not a malfunction.
- Resetting the camcorder's settings using the [Other Functions] [Reset] [All Settings] or [Camera Settings] menu option will reset also the black balance adjustment. In such case, perform the procedure again.

Downloaded From camera-usermanual.com Canon Manuals

Downloaded From camera-usermanual.com Canon Manuals

Recording Video

This section explains the recording basics. Before you begin recording, make a test recording first to check if the camcorder operates correctly. Record an AVCHD clip at 28 Mbps for approximately 25 minutes and an MP4 clip at 35 Mbps for approximately 20 minutes (54). Should the camcorder fail to operate correctly, refer to *Troubleshooting* (185).
For details on recording audio, refer to *Recording Audio* (84).

Operating modes: CAMERA MEDIA | AVCHD MP4

Preparing to Record

1 Attach a charged battery pack to the camcorder (24).

2 Attach a lens (31).

3 Attach the handle unit, grip unit, etc. as necessary to build the desired configuration (31).

4 Adjust the viewfinder and OLED panel.

5 Insert an SD card into an SD card slot (41).
- Insert another SD card into the other SD card slot to use relay recording (43) or double slot recording (43).

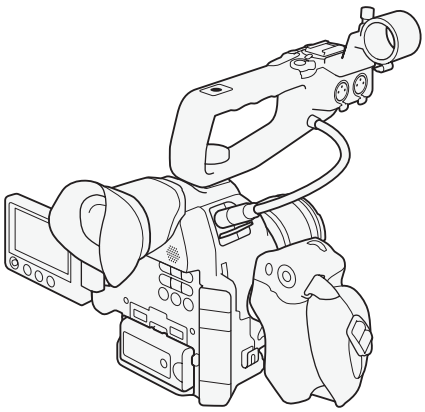

Recording

1 Set the POWER switch to CAMERA (25).
- The camcorder turns on in CAMERA mode and enters record pause mode.
- At first, both SD card access indicators will illuminate in red. After a moment, the access indicator of the SD card slot selected for recording will turn green and the other access indicator will go out.

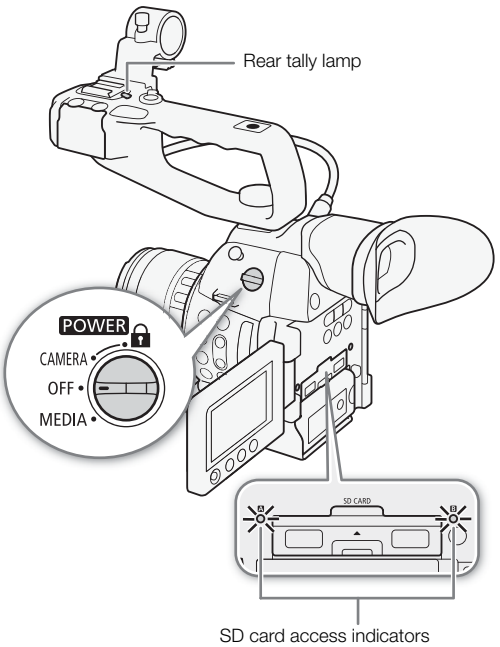

Downloaded From camera-usermanual.com Canon Manuals

2 Press the START/STOP button to begin recording.

- Recording starts. The rear and front tally lamps illuminate and the recording indicator [●REC] appears at the top of the screen.
- You can use the START/STOP button on the grip unit, the camcorder's body (on the front, next to the lens mount) or the handle unit.

3 Press the START/STOP button to pause the recording.

- The clip* is recorded to the SD card and the camcorder enters record pause mode. Both tally lamps will go out.

* "Clip" refers to a single movie unit recorded with a single recording operation.

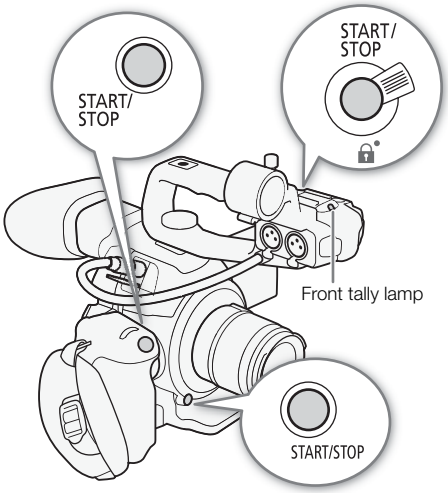

IMPORTANT

- Observe the following precautions while either of the SD card access indicators is illuminated in red. Failure to do so may result in permanent data loss.
  - Do not open the SD card compartment cover and do not remove the SD cards.
  - Do not disconnect the power source or turn off the camcorder.
- Be sure to save your recordings regularly (📖 143), especially after making important recordings. Canon shall not be liable for any loss or corruption of data.

NOTES

- Depending on the shooting conditions, the camcorder may pick up and record the operation sounds of the lens (autofocus, aperture, image stabilization, etc.) or the cooling fan. In such case, using an external microphone is recommended to reduce the effect.
- A single clip can be recorded continuously for up to approximately 12 hours. At that point, the camcorder will automatically stop recording.
- You can use [Other Functions] ▶ [Review Recording] (📖 94) to review part or all of the last clip recorded.
- You can use [Other Functions] ▶ [Delete Last Clip] (📖 175) to delete the last clip recorded. However, you cannot delete the last clip if double slot recording is on.
- If [Video Setup] ▶ [HDMI] ▶ [Rec Command] is set to [On] and you use the HDMI OUT terminal to connect the camcorder to a device compatible with HDMI recording commands, when you start or stop recording with the camcorder, the other device will also start or stop recording.
- **About recorded clips**
  - When the camcorder switches from recording on one SD card to another during relay recording, the video will be recorded as two separate relay clips. With the supplied software, **Data Import Utility**, you can join relay clips recorded on two SD cards and save them on a computer (📖 143).
  - The video (stream) file in a clip will be split approximately every 4 GB for clips with a long recording time. Even in such case, playback will be continuous. With the supplied software, **Data Import Utility**, you can join such split files into a single clip and save them on a computer (📖 143).

Downloaded From camera-usermanual.com Canon Manuals

Locking the Controls in Recording Mode

Once in CAMERA mode, you can set the **POWER** switch to 🔒 (key lock) to lock all the physical controls (buttons and switches) on the camcorder, save for the START/STOP button*. This is useful in preventing settings from being changed due to inadvertently pressing one of the buttons. Return the **POWER** switch to the CAMERA position to reactivate the controls.

Additionally, the START/STOP button on the handle unit has its own lock lever to prevent its accidental operation. Turn the lock lever to 🔒 position to lock the START/STOP button**. Return the lock lever to its original position to enable use of the START/STOP button again.

* With the [Other Functions] ❯ [Custom Function] ❯ [🔒 START/STOP] setting, you can choose to lock all buttons, including the START/STOP button. In either case, you can still operate the camcorder using the Browser Remote application.

**You can still use the START/STOP buttons on the camcorder and grip unit.

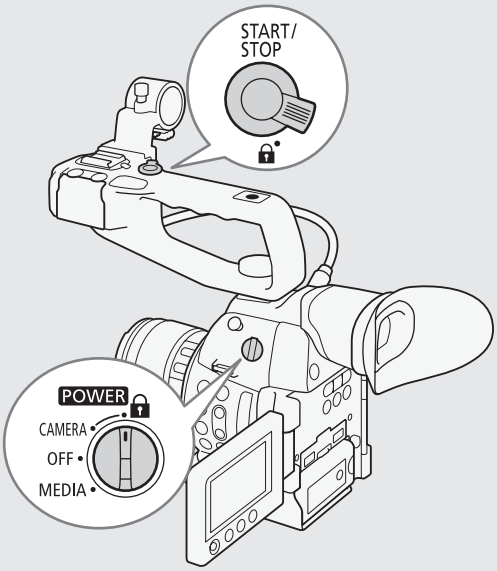

Remote Operation Using Browser Remote

After completing the necessary preparations (153), you can start and stop recording from a connected device using the Browser Remote application.

1 Press [LIVE VIEW ON/OFF] to show the camcorder's live view image on the Browser Remote screen.

2 Press [START/STOP] to begin recording.

- The recording operation indicator changes to [●REC] and the center of the START/STOP button lights up in red.
- The time code displayed on the Browser Remote screen is the same as on the camcorder.
- Press [START/STOP] again to pause the recording.

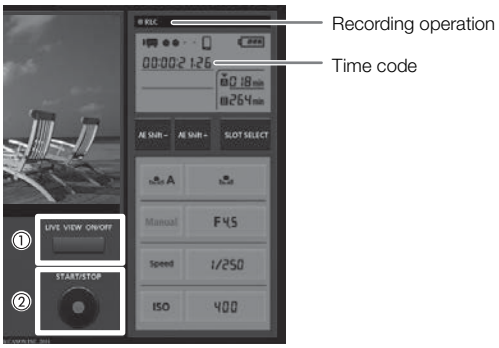

NOTES

- The Browser Remote application has a key lock function that is limited only to the controls on the application's screens (you will still be able to use the controls on the camcorder). Press [🔒] to lock the application's controls; press [🔒] to reactivate them.

Downloaded From camera-usermanual.com Canon Manuals

Onscreen Displays

Refer to this section for an explanation of the various screen displays that appear in CAMERA mode. You can use the custom display function (📖 122) to turn off individual onscreen displays if they are not required. In the following table, the "Custom Display" column indicates whether the icon can be turned off through [OLED/VF Setup] [Custom Display 1] or [Custom Display 2] (indicated by "1:" or "2:", respectively) and the name of the custom display submenu name.

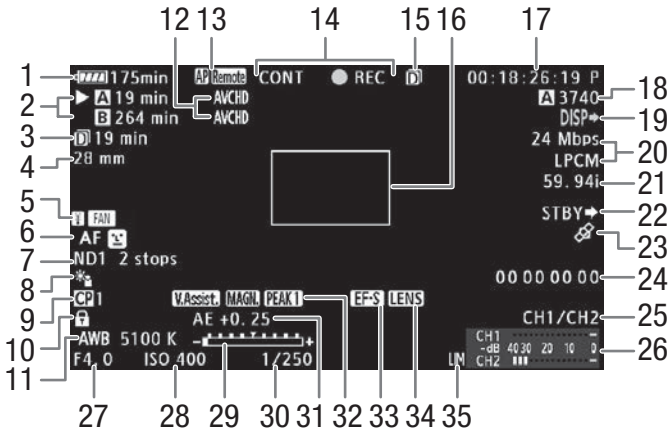

When displaying the date and time (📖 172):

Number	Icon/Display	Description	Custom Display	📖
1	→ → → → → (in red) 000 min	Remaining battery charge The icon shows an estimate of the remaining charge. When using a battery pack compatible with Intelligent System, the remaining time is displayed, in minutes, next to the icon. • When is displayed, replace the battery pack with a fully charged one. • Depending on the conditions of use, the actual battery charge may not be indicated accurately.	2: [Remaining Battery]	–
2	SD card status and available recording time estimate		2: [Remaining Rec Time]	–
	A 00 min, B 00 min	Can record on SD card The SD card selected for recording is indicated with a ▶ mark.		
	, (in red)	No SD card or cannot record on the SD card.		
3	D 00 min	Remaining recording time for double slot recording (📖 43): in green - can record; in yellow - the SD card is almost full; in red - cannot record.		
	D CONT 00:00:00	Recording time for continuous recording (📖 98)		
4	00 mm	Current focal length of an attached EF lens. • The displayed value is an estimate.	1: [Focal Length]	–
5	(in yellow/red), FAN	Temperature warning/Fan operation. • When the camcorder's internal temperature is high, will appear in yellow. If the temperature rises further due to continued use, it will change to red and the fan may be activated automatically.	2: [Temperature/Fan]	52

Downloaded From camera-usermanual.com Canon Manuals

Number	Icon/Display	Description	Custom Display	🕮
6	MF, AF	Focus mode	1: [Focus Mode]	71
	, o	Face AF		
7	ND1 2 stops, ND2 4 stops, ND3 6 stops	ND filter	1: [ND Filter]	62
8	,	Light metering mode	1: [Light Metering]	67
9	CP 0, CP 0	Custom picture	1: [Custom Picture]	110
10		Key lock	1: [Key Lock]	49
11	AWB, 0000 K, A/B, 0000 K, K 0000 K, ,	White balance	1: [White Balance]	68
12	AVCHD, MP4	Movie format	2: [Movie Format]	54
13	Wi-Fi functions		2: [Network Functions]	146, 149
	, AP	Network type (Wi-Fi, Camera Access Point) and connection status: in white - function ready to be used; in yellow - connecting to or disconnecting from a network.		
	FTP 0	FTP file transfer and number of files queued: icon in white - login to the FTP server completed; in yellow - logging in to the FTP server; in red - FTP transfer not possible.		158
	Remote	Browser Remote: in white - preparations for connection completed; in yellow - connecting to or disconnecting from the control device; in red - Browser Remote cannot be used.		153
14	Recording operation		2: [Recording Mode]	–
	STBY, ●REC	Record pause, recording.		
	S&F STBY, ●S&F REC	Slow & fast motion recording: record pause, recording.		96
	PRE REC STBY, ●PRE REC	Pre-recording: record pause, recording.		96
	CONT STBY	Continuous recording: CONT in white - record pause, CONT in red - recording between shots.		98
	CONT ●REC	Continuous recording: recording.		
15	D	Double slot recording	2: [Recording Mode]	43
16		One-shot AF's focus frame	1: [Focus Mode]	71
17	00:00:00.00, 00:00:00:00	Time code	2: [Time Code]	80
18	A/B 0000	Approximate number of photos that can be recorded on the SD card	2: [Remaining Photos]	163
19	DISP	Onscreen displays superimposed on video output	2: [Output Display]	139
20	00 Mbps 0000x0000	Bit rate (Mbps) and resolution • The resolution appears only for MP4 clips.	2: [Bit Rate/ Resolution]	54
	LPCM	LPCM audio recording • Displayed only when [Other Functions] [AVCHD] [Bit Rate] is set to an option with LPCM recording.	2: [Bit Rate/ Resolution]	84
21	00.00P, 00.00i	Frame rate • During slow & fast motion recording, the shooting frame rate is also displayed (00/00.00P).	2: [Frame Rate]	55
22	REC, STBY	HDMI recording command	2: [Rec Command]	48
23		GPS signal: continuously on - satellite signal acquired; flashing - satellite signal not acquired. • Displayed only when an optional GP-E2 GPS Receiver is connected to the camcorder.	2: [GPS]	100
24	00 00 00 00	User bit	2: [User Bit]	83

Downloaded From camera-usermanual.com Canon Manuals

Number	Icon/Display	Description	Custom Display	🕮
25	CH0/CH0	Audio output channel	2: [Monitor Channels]	141
26		Audio level meter	2: [Audio Level]	89
27	F0.0	Aperture value	1: [Iris]	63
28	ISO 000, 00.0dB	ISO speed, gain	1: [ISO/Gain]	60
29		Exposure bar • Only displayed when the gain, iris and shutter are all set to manual adjustment.	1: [Exposure]	66
30	1/0000, 000.00°, 000.00Hz	Shutter speed	1: [Shutter]	57
31	AE ±0.00	AE Shift	1: [Exposure]	66
32	V.Assist.	View assistance	1: [View Assist.]	53
	PEAK1, PEAK2	Peaking	1: [Peaking]	72
	MAGN.	Magnification	1: [Magnification]	73
33	EF-S	Sensor area correction for EF-S lenses	1: [EF-S Lens]	32
34	LENS	Lens error warning	1: [Lens]	189
35	LIM	Audio peak limiter	2: [Audio Level]	89
36	Date/time		2: [Date/Time]	172

NOTES

- You can press the DISP. button to switch the onscreen displays in the following sequence.
  CAMERA mode: Show all onscreen displays → show only onscreen markers* → hide all onscreen displays.
  MEDIA mode**: Show all onscreen displays → show onscreen displays except for the joystick guide → hide all onscreen displays.

* Only when [OLED/VF Setup] ❯ [Markers] ❯ [Enable] is set to [On].
** During clip playback.

The Camcorder's Cooling System

[Other Functions] ❯ [Fan] ❯ [Low]

The camcorder's internal temperature is controlled using a cooling fan that will turn on whenever the camcorder itself is turned on. However, you can turn off the cooling fan temporarily if necessary.

1 Open the [Fan] submenu.
[Other Functions] ❯ [Fan]

2 Select the desired option and then press the joystick.

Options

[Low]: The cooling fan is on at a lower speed as long as the camcorder is on.
[High]: The cooling fan is on at a higher speed as long as the camcorder is on.
[Automatic]: During record pause, the cooling fan is on at a lower speed. The fan will automatically stop while recording. If the temperature becomes too high, even while recording, the icon will turn red and the cooling fan will come on to prevent overheating. Once the camcorder has cooled off sufficiently, the fan will turn off again. While the fan is activated automatically, FAN will appear next to the icon. Use this setting when you do not want the fan's noise to interfere with the recording.

IMPORTANT

- When the cooling fan is on, the exhaust vent (marked as EXHAUST VENT) will emit warm air.

Downloaded From camera-usermanual.com Canon Manuals

NOTES

- Depending on the ambient temperature and other shooting conditions, the cooling fan may not turn off even if you set [Fan] to [Automatic].
- The cooling fan cannot be turned off in MEDIA mode.
- When changing the camcorder's configuration, be careful not to obstruct the cooling fan's air intake and exhaust vents (marked respectively as AIR INTAKE and EXHAUST VENT).

Canon Log Gamma and CINEMA Preset

[Camera Setup] > [CINEMA Locked] > [Off]

The Canon Log gamma setting makes use of the image sensor to offer spectacular dynamic range. The easiest way to activate Canon Log gamma is to use the CINEMA preset settings. In addition to Canon Log gamma, the CINEMA preset settings use also other preset picture-related settings designed with professional cinematography in mind. Note that when you use CINEMA preset settings, other custom picture settings will be "locked", making them unavailable for you to change.

With the CINEMA preset settings, the gamma and color matrix (📖 114) will be set to the Canon Log setting, which will be applied to image recorded on an SD card and output from the HDMI OUT terminal.
Clips recorded using Canon Log gamma need to be processed in post-production. During post-production, you can apply a LUT (look-up table) to clips recorded using Canon Log gamma to view the clips with more natural colors. For details about available LUTs, visit your local Canon Web site.

1 Open the [CINEMA Locked] submenu to activate the CINEMA preset settings.
[Camera Setup] > [CINEMA Locked]

2 Select [On] and then press the joystick.
- All picture-related settings will be set according to the CINEMA preset values.
- [CP LOCKED] appears on the left of the screen.

Checking the Image from Canon Log Gamma

When Canon Log gamma is used, the image displayed on the screen will appear darker than usual. You can use the view assistance function to display an image that approximates the one that would be obtained using a normal gamma setting. View assistance is applied on the camcorder screen and can also be applied to a monitor connected to the HDMI OUT terminal. It will not appear in your recordings.
When you are shooting with Canon Log gamma and are checking the picture on an external monitor connected to the HDMI OUT terminal, you can apply a LUT to the output (📖 138).

Activating View Assistance

[OLED/VF Setup] > [View Assist.] > [Off]

1 Open the [View Assist.] submenu.
[OLED/VF Setup] > [View Assist.]

2 Select [On] and then press the joystick.
- V.Assist. will appear on the lower left of the screen.

NOTES

- You can enable Canon Log gamma also by selecting the [C9: CINEMA] custom picture file (📖 111). In such case, you can adjust other custom picture settings.

Downloaded From camera-usermanual.com Canon Manuals

Video Configuration: Movie Format, System Frequency, Bit Rate and Frame Rate

Before you record, select the movie format, system frequency, bit rate and frame rate. The available options for bit rate and frame rate will depend on the system frequency selected: 59.94 Hz (former NTSC broadcast area) or 50.00 Hz (former PAL broadcast area). See the following table for a summary.

Selecting the Movie Format (AVCHD/MP4)

You can choose to record in AVCHD or MP4 format. MP4 format is more suitable for uploading to the Web and for file transfer.

Operating modes: CAMERA MEDIA | AVCHD MP4

1 Open the [Movie Format] submenu.
[Other Functions] [Movie Format]
2 Select [AVCHD] or [MP4] and then press the joystick.

[Other Functions]
[Movie Format]
[AVCHD]

Selecting the System Frequency

Operating modes: CAMERA MEDIA | AVCHD MP4

1 Open the [System Frequency] submenu.
[Other Functions] [System Frequency]
2 Select [59.94 Hz] or [50.00 Hz] and then press the joystick.
- The camcorder will reset and restart in the selected mode.

[Other Functions]
[System Frequency]
[59.94 Hz] or [50.00 Hz]*

* Depending on the country/region of purchase.

Selecting the Bit Rate

The bit rate selected determines also the resolution (frame size) and audio recording mode of the recordings. (The audio recording mode is only for AVCHD clips.)

Operating modes: CAMERA MEDIA | AVCHD MP4

1 Open the bit rate submenu for the selected movie format.
For AVCHD: [Other Functions] [AVCHD] [Bit Rate]
For MP4: [Other Functions] [MP4] [Bit Rate/Resolution]
2 Select the desired option and then press the joystick.
- The selected bit rate and resolution will appear on the upper right of the screen. (The resolution appears only for MP4 clips.)

[Other Functions]
[AVCHD] or [MP4]
[Bit Rate] (for AVCHD)
or
[Bit Rate/Resolution] (for MP4)
[24 Mbps LPCM] (for AVCHD)
or
[24 Mbps 1920x1080] (for MP4)

Downloaded From camera-usermanual.com Canon Manuals

Selecting the Frame Rate

Follow the procedure below to select the frame rate. However, in the following cases, the frame rate is set automatically and cannot be changed.

- When bit rate is 28 Mbps LPCM or 28 Mbps (for AVCHD clips) or 35 Mbps (for MP4 clips).
- For 50.00 Hz recordings, when the movie format is MP4.

Operating modes: CAMERA MEDIA | AVCHD MP4

1 Open the [Frame Rate] submenu for the selected movie format.
[Other Functions] [AVCHD] or [MP4] [Frame Rate]

2 Select the desired option and then press the joystick.
- The selected frame rate will appear on the upper right of the screen.

[Other Functions]
[AVCHD] or [MP4]
[Frame Rate]
[59.94i] or [50.00i]* (for AVCHD) or [29.97P] or [25.00P]* (for MP4)

* Depending on the country/region of purchase.

NOTES

- A single SD card cannot be used to record clips at different system frequencies (50.00 Hz recordings/59.94 Hz recordings)*.
  * AVCHD clips only.
- For details on the signal output from the camcorder's terminals, refer to *Video Output Configuration* (135).

Available video configuration settings

Movie format	Bit rate[1]	Resolution	Audio recording mode	Available frame rate options by system frequency	
				59.94 Hz	50.00 Hz
AVCHD	28 Mbps LPCM	1920x1080	Linear PCM	59.94P	50.00P
	28 Mbps		Dolby Digital		
	24 Mbps LPCM		Linear PCM	59.94i PF29.97[2] 23.98P	50.00i PF25.00[3]
	24 Mbps		Dolby Digital		
	17 Mbps				
	7 Mbps	1440x1080			
MP4	35 Mbps	1920x1080	AAC	59.94P	50.00P
	24 Mbps			29.97P 23.98P	25.00P
	17 Mbps				
	4 Mbps	1280x720			
	3 Mbps	640x360			

[1] The camcorder uses a variable bit rate (VBR).
[2] Shooting at 29.97 frames per second, progressive; recorded as 59.94i.
[3] Shooting at 25.00 frames per second, progressive; recorded as 50.00i.

Downloaded From camera-usermanual.com Canon Manuals

Changing Main Camera Functions with the Joystick

You can adjust three main camera functions—shutter speed, white balance and ISO speed/gain—using only the joystick (direct setting mode). This section will explain the basic operation of the direct setting mode. For specific details about the functions please refer to the each function's section: shutter speed (📖 57), white balance (📖 68), ISO speed/gain (📖 60).

Operating modes: CAMERA MEDIA | AVCHD MP4

1 Press the joystick.
- The onscreen display of the function to be adjusted will be highlighted in orange.
- Push the joystick left/right to change the function to be adjusted. Pushing the joystick to the right will cycle through the options in the following order: White balance mode icon, the ISO speed/gain value and the shutter value.

2 Push the joystick up/down to select the desired value (ISO speed, gain, shutter) or desired white balance mode and then press the joystick.
- The selected value will be set and the display will return to normal.

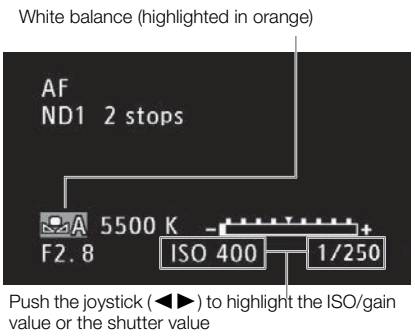

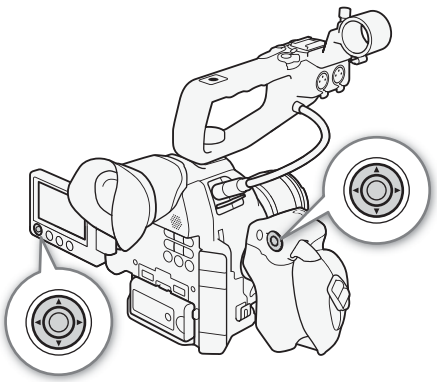

ⓘ NOTES
- The direct setting mode will end automatically if no operation is performed for about 6 seconds or if you open the menu or a status screen.

Downloaded From camera-usermanual.com Canon Manuals

Shutter Speed Mode

Set the shutter speed mode based on the recording conditions. For example, you may want to set slower shutter speeds in darker environments. The camcorder offers the following modes.

Operating modes: CAMERA MEDIA | AVCHD MP4

[Speed]: Allows you to set the shutter speed (in fractions of a second). You can select the increment to use when adjusting the shutter speed between 1/3-stop and 1/4-stop increments.

[Angle]: You can set the shutter angle to determine the shutter speed.

[Clear Scan]: Set the frequency in order to record CRT computer monitors without displaying black bands or flicker on the screen.

[Slow]: You can set slower shutter speeds to obtain brighter recordings in places with insufficient lighting. This mode is not available during slow & fast motion recording mode.

[Off]: The camcorder uses a standard shutter speed based on the frame rate.

Available shutter speeds

The available shutter speeds vary depending on the system frequency and frame rate.

Shutter speed mode		Frame rate (59.94 Hz recordings)		
		59.94P / 59.94i	29.97P / PF29.97	23.98P
Off[1]		1/60	1/30	1/24
Speed[1, 2]	1/3-stop increments	1/60, 1/80, 1/100, 1/125, 1/160, 1/200, 1/250, 1/320, 1/400, 1/500, 1/640, 1/800, 1/1000, 1/1250, 1/1600, 1/2000	1/30, 1/40, 1/50, 1/60, 1/80, 1/100, 1/125, 1/160, 1/200, 1/250, 1/320, 1/400, 1/500, 1/640, 1/800, 1/1000, 1/1250, 1/1600, 1/2000	1/25, 1/30, 1/40, 1/50, 1/60, 1/80, 1/100, 1/125, 1/160, 1/200, 1/250, 1/320, 1/400, 1/500, 1/640, 1/800, 1/1000, 1/1250, 1/1600, 1/2000
	1/4-stop increments	1/60, 1/75, 1/90, 1/100, 1/120, 1/150, 1/180, 1/210, 1/250, 1/300, 1/360, 1/420, 1/500, 1/600, 1/720, 1/840, 1/1000, 1/1200, 1/1400, 1/1700, 1/2000	1/30, 1/34, 1/40, 1/48, 1/60, 1/75, 1/90, 1/100, 1/120, 1/150, 1/180, 1/210, 1/250, 1/300, 1/360, 1/420, 1/500, 1/600, 1/720, 1/840, 1/1000, 1/1200, 1/1400, 1/1700, 1/2000	1/24, 1/30, 1/34, 1/40, 1/48, 1/60, 1/75, 1/90, 1/100, 1/120, 1/150, 1/180, 1/210, 1/250, 1/300, 1/360, 1/420, 1/500, 1/600, 1/720,1/840, 1/1000, 1/1200, 1/1400, 1/1700, 1/2000
Angle[1]		360°, 240°, 216°, 180°, 120°, 90°, 60°, 45°, 30°, 22.5°, 15°, 11.25°	360°, 240°, 216°, 180°, 120°, 108°, 90°, 60°, 45°, 30°, 22.5°, 15°, 11.25°	360°, 345.6°, 288°, 240°, 180°, 172.8°, 144°, 120°, 90°, 86.4°, 72°, 60°, 45°, 30°, 22.5°, 15°, 11.25°
Clear Scan[1]		59.94 Hz to 250.51 Hz	29.97 Hz to 250.51 Hz	23.98 Hz to 250.51 Hz
Slow		1/4, 1/8, 1/15, 1/30	1/4, 1/8, 1/15	1/3, 1/6, 1/12

Shutter speed mode		Frame rate (50.00 Hz recordings)	
		50.00P / 50.00i	25.00P / PF25.00
Off[1]		1/50	1/25
Speed[1, 2]	1/3-stop increments	1/50, 1/60, 1/80, 1/100, 1/125, 1/160, 1/200, 1/250, 1/320, 1/400, 1/500, 1/640, 1/800, 1/1000, 1/1250, 1/1600, 1/2000	1/25, 1/30, 1/40, 1/50, 1/60, 1/80, 1/100, 1/125, 1/160, 1/200, 1/250, 1/320, 1/400, 1/500, 1/640, 1/800, 1/1000, 1/1250, 1/1600, 1/2000
	1/4-stop increments	1/50, 1/60, 1/75, 1/90, 1/100, 1/120, 1/150, 1/180, 1/210, 1/250, 1/300, 1/350, 1/400, 1/500, 1/600, 1/700, 1/800, 1/1000, 1/1200, 1/1400, 1/1600, 1/2000	1/25, 1/29, 1/33, 1/40, 1/50, 1/60, 1/75, 1/90, 1/100, 1/120, 1/150, 1/180, 1/210, 1/250, 1/300, 1/350, 1/400, 1/500, 1/600, 1/700, 1/800, 1/1000, 1/1200, 1/1400, 1/1600, 1/2000
Angle[1]		360°, 300°, 240°, 180°, 150°, 120°, 90°, 60°, 45°, 30°, 22.5°, 15°, 11.25°	360°, 300°, 240°, 180°, 150°, 120°, 90°, 75°, 60°, 45°, 30°, 22.5°, 15°, 11.25°
Clear Scan[1]		50.00 Hz to 250.51 Hz	25.00 Hz to 250.51 Hz
Slow		1/3, 1/6, 1/12, 1/25	1/3, 1/6, 1/12

[1] During slow & fast motion recording mode, available values will vary depending on the selected shooting frame rate.
[2] In the Browser Remote application, all shutter speeds (1/3-stop and 1/4-stop increments) will be available from the same list.

Downloaded From camera-usermanual.com Canon Manuals

Changing the Shutter Speed Mode

1 Open the shutter [Mode] submenu.
[Camera Setup] > [Shutter] > [Mode]

2 Select the desired mode and then press the joystick.
- If you selected [Speed] (the default value), you can continue the procedure to select the increment scale to use when adjusting the shutter speed.

3 Open the [Shutter Increment] submenu.
[Camera Setup] > [Shutter] > [Shutter Increment]

4 Select [1/3 stop] or [1/4 stop] and then press the joystick.

[Camera Setup]
[Shutter]
[Mode]
[Speed]

[Camera Setup]
[Shutter]
[Shutter Increment]
[1/4 stop]

Adjusting the Shutter Value

1 Press the SHUTTER button.
- The current shutter value will be highlighted in orange.

2 Push the joystick up/down to select the desired shutter value (shutter speed, angle value or clear scan frequency) and then press the joystick.
- The selected shutter value will be set and the display will return to normal.
- You can also adjust the shutter value using only the joystick (56).

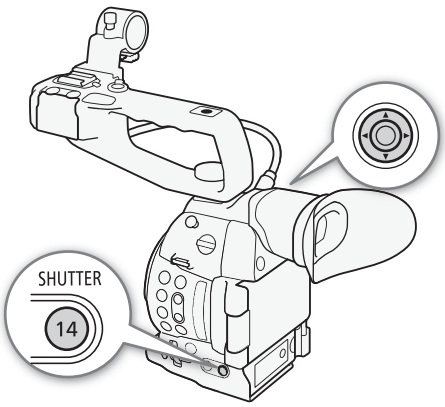

NOTES
- If you set an assignable button to [SHUTTER] (107), you can press that button instead of the SHUTTER button to highlight the shutter value.

Remote Operation Using Browser Remote

After completing the necessary preparations (153), you can adjust the shutter speed remotely from a connected device using the Browser Remote application.

1 Press the shutter speed mode button on the Browser Remote screen.

2 Select the desired mode.

3 Press the current shutter speed, angle value or clear scan frequency and select the desired value from the list.
- You may need to scroll up/down to see all the available values.
- The selected value will be displayed on the Browser Remote screen and will be applied on the camcorder.

Downloaded From camera-usermanual.com Canon Manuals

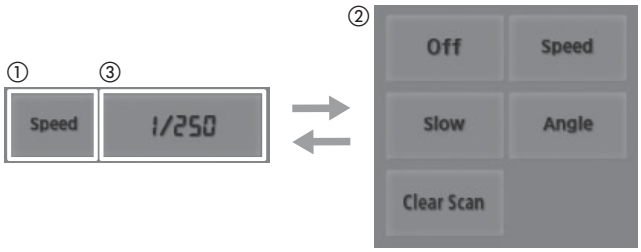

Using Slow Shutter Mode

When recording in dark surroundings, you can obtain a brighter picture by using slow shutter mode. You can also use this mode when you wish to add certain effects to your recordings, such as blurring the background during panning shots or recording a moving subject with an afterimage trail.

- Image quality may not be as good as when using faster shutter speeds in brighter surroundings.

NOTES

- Closing down the aperture when recording under bright conditions may cause the picture to appear soft or out of focus. To avoid the loss of sharpness due to diffraction, use a faster shutter speed, a denser ND filter (📖 62) or open up the aperture.
- When the shutter speed mode is set to [Slow], bright red, green or blue dots may appear on the screen. In such case, use a faster shutter speed or select a lower ISO speed or gain value (📖 60).
- Even when using the [C7: EOS Std.] preset custom picture file, if you set the camcorder to a certain shutter speed, you may not get the exactly the same image brightness as you would on an EOS digital SLR camera set to the same shutter speed.
- When an optional RC-V100 Remote Controller is connected to the camcorder, you can change the shutter speed mode with the remote controller's SHUTTER SELECT button.

Flicker Reduction

You can perform the following procedure to have the camcorder automatically detect and reduce flicker.

[Camera Setup]
[Flicker Reduction]
[Off]

1 Open the [Flicker Reduction] submenu.
[Camera Setup] ◆ [Flicker Reduction]

2 Select [Automatic] and then press the joystick.

NOTES

- When recording under artificial light sources such as fluorescent, mercury or halogen lamps, the screen may flicker depending on the shutter speed. You may be able to avoid flicker by setting the shutter speed mode to [Speed] and the shutter speed to a value matching the frequency of the local electrical system: 1/50* or 1/100 for 50 Hz systems, 1/60 or 1/120 for 60 Hz systems.
  * May not be available depending on the frame rate.

Downloaded From camera-usermanual.com Canon Manuals

ISO Speed/Gain

Depending on the shooting conditions you may want to adjust the brightness of the image. You can do so by changing the ISO speed or gain value to adjust the sensitivity of the sensor.

Operating modes: CAMERA MEDIA | AVCHD MP4

Available ISO speed and gain settings

	Increment	Normal range	Extended range[1]
ISO speed	1-stop increments	320[2], 400, 800, <850>[3], 1600, 3200, 6400, 12800, 20000[2, 4]	25600, 51200, 102400[2]
	1/3-stop increments	320, 400, 500, 640, 800, <850>[3], 1000, 1250, 1600, 2000, 2500, 3200, 4000, 5000, 6400, 8000, 10000, 12800, 16000, 20000	25600, 32000, 40000, 51200, 64000, 80000, 102400
Gain	Normal	-6 dB to 30 dB in 3 dB increments	33 dB, 36 dB, 39 dB, 42 dB, 44 dB
	Fine	-6 dB to 24 dB in 0.5 dB increments	–

[1] Settings available only when [Camera Setup] > [ISO/Gain] > [Extended Range] is set to [On].
[2] The minimum and maximum ISO speeds are available even when the 1-stop increment scale is selected.
[3] ISO speed required for a suitable dynamic range for Canon Log gamma. Equivalent to a gain value of 2.5 dB.
[4] This value is only available when [Extended Range] is set to [Off].

Changing the ISO Speed or Gain Settings

1 Open the ISO speed/Gain [Select] submenu.
[Camera Setup] > [ISO/Gain] > [Select]

2 Select [ISO] or [Gain] and then press the joystick.

If you selected [ISO] (the default value):

3 Open the [ISO Increment] submenu to select the increment to use when adjusting the ISO speed.
[Camera Setup] > [ISO/Gain] > [ISO Increment]

4 Select [1 stop] or [1/3 stop] and then press the joystick.

If you selected [Gain]:

3 Open the [Gain] submenu to select the increment to use when adjusting the gain.
[Camera Setup] > [ISO/Gain] > [Gain]

4 Select [Normal] (3-dB increment) or [Fine] (0.5-dB increment) and then press the joystick.

[Camera Setup] > [ISO/Gain] > [Select] > [ISO]

[Camera Setup] > [ISO/Gain] > [ISO Increment] > [1/3 stop]

[Camera Setup] > [ISO/Gain] > [Gain] > [Normal]

Downloaded From camera-usermanual.com Canon Manuals

Adjusting the ISO/Gain Value

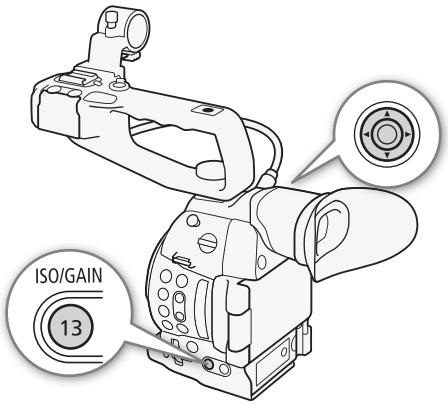

1 Press the ISO/GAIN button.
- The current ISO speed/gain value will be highlighted in orange.

2 Push the joystick up/down to select the desired ISO speed or gain value and then press the joystick.
- The selected ISO speed/gain value will be set and the display will return to normal.
- You can also adjust the ISO speed/gain value using only the joystick (56).

Remote Operation Using Browser Remote

After completing the necessary preparations (153), you can adjust the ISO speed/gain remotely from a Wi-Fi-enabled device using the Browser Remote application.

1 Press [ISO] and then the desired setting ([ISO] or [Gain]) to change.

2 Press the current ISO speed or gain value and select the desired value from the list.
- You may need to scroll up/down to see all the available values.
- The selected value will be displayed on the Browser Remote screen and will be applied on the camcorder.

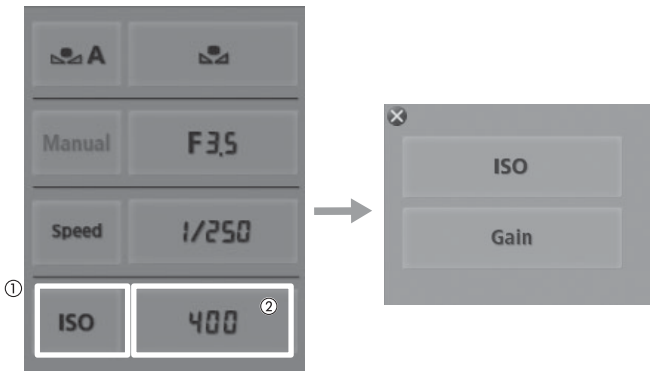

NOTES
- When high ISO speeds or gain levels are set, the picture may flicker slightly.
- When high ISO speeds or gain levels are set, bright red, green or blue dots may appear on the screen. In such case, use a faster shutter speed (57) or select a lower ISO speed or gain value.
- When the ISO speed or gain level is changed, some noise may appear momentarily on the screen. Do not adjust the ISO speed/gain level while recording.
- When an optional RC-V100 Remote Controller is connected to the camcorder, you can adjust the ISO speed or gain value with the remote controller's ISO/GAIN ▲/▼ buttons.

Downloaded From camera-usermanual.com Canon Manuals

ND Filter

Using the ND filters allows you keep the aperture within an appropriate range when recording in bright surroundings*.

* Closing down the aperture when recording under bright conditions may cause the picture to appear soft or out of focus. To avoid the loss of sharpness due to diffraction, use a denser ND filter or a faster shutter speed (57).

Operating modes: CAMERA MEDIA | AVCHD MP4

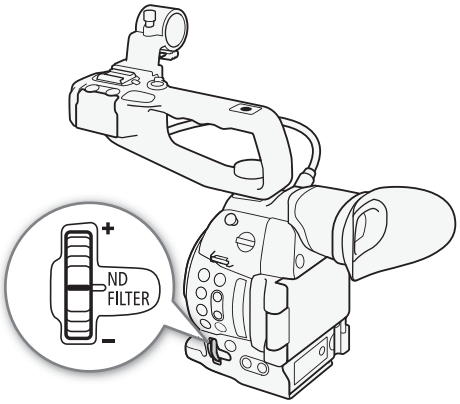

Turn the ND FILTER dial toward the + or - direction to select the desired ND filter setting.

- Turning the dial up (in the + direction) will change the ND filter setting in the following order: [ND1 2 stops] → [ND2 4 stops] → [ND3 6 stops] → ND filter off.

NOTES

- Depending on the scene, the color may change when turning the ND filter on/off. Setting a custom white balance (68) may be effective in such case.

Downloaded From camera-usermanual.com Canon Manuals

Adjusting the Aperture

You can affect the brightness of your recordings or change the depth of field by adjusting the aperture. Available aperture values will vary depending on the lens attached to the camcorder.
The camcorder offers 3 ways to adjust the aperture. By default, the camcorder is set to manual aperture. The aperture mode can only be changed when a lens compatible with automatic aperture is attached to the camcorder.

Manual aperture: Adjust the aperture value manually using the control dial on the grip unit, or remotely, using the Browser Remote application.

Momentary automatic aperture - Push Auto Iris*: During manual aperture, press the PUSH AUTO IRIS button or use the Browser Remote application to temporarily adjust the aperture automatically.

Automatic aperture**: The camcorder adjusts the aperture automatically.

* Available when an EF lens (except manual focus lenses) is attached to the camcorder.
**Available only with compatible EF lenses (65).

Operating modes: CAMERA MEDIA | AVCHD MP4

Manual Aperture Control

You can adjust the aperture value of most EF lenses using the control dial on the grip unit. Available aperture values will vary depending on the EF lens attached to the camcorder.
By default, the camcorder is set to manual aperture.

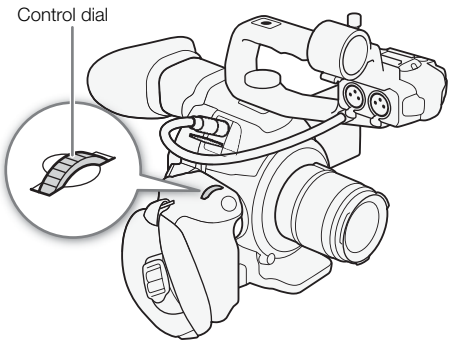

1 Open the aperture [Mode] submenu.
[Camera Setup] > [Iris] > [Mode]
- This setting is available only when an EF lens compatible with automatic aperture is attached to the camcorder.
- For non-compatible lenses, the aperture mode will be set to [Manual] and cannot be changed.

2 Select [Manual] and then press the joystick.

3 Open the [Iris Increment] submenu to select the increment scale to use when adjusting the aperture.
[Camera Setup] > [Iris] > [Iris Increment]

4 Select [1/2 stop], [1/3 stop] or [Fine] and then press the joystick.

5 Turn the control dial to adjust the aperture.
- The selected aperture value will appear on the lower left of the screen.
- When [Camera Setup] > [Iris] > [Iris Increment] is set to [Fine], the actual increments will be smaller than 1/3 stop but the onscreen display will show the closest 1/3-stop aperture value.

[Camera Setup] > [Iris] > [Mode] > [Manual]

Remote Operation Using Browser Remote

After completing the necessary preparations (153), you can adjust the aperture value remotely from a Wi-Fi-enabled device using the Browser Remote application.

1 On the camcorder, set [Camera Setup] > [Iris] > [Mode] to [Manual].

2 Press the current aperture value on the Browser Remote screen.

[Camera Setup] > [Iris] > [Iris Increment] > [1/3 stop]

Downloaded From camera-usermanual.com Canon Manuals

3 Select the desired aperture value from the list.

- You may need to scroll up/down to see all the available values.
- Alternatively, you can press IRIS [+] to open the aperture or IRIS [-] to close the aperture in 1/8-stop increments. (Onscreen displays will show the closest 1/3-stop aperture value.)
- The selected value will be displayed on the Browser Remote screen and will be applied on the lens.

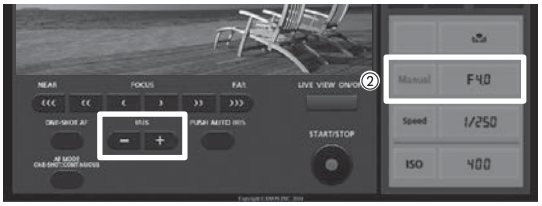

NOTES

- When using a Canon Cinema lens or an EF lens with no lens contacts, you cannot adjust the aperture using the camcorder. Adjust the aperture using the lens.
- You can use the [Other Functions] [Custom Function] [Grip Ctrl Dial Dir.] setting (121) to change the direction of the adjustment when you turn the control dial.
- If you are using an EF lens that can correct the aperture value according to the position of the zoom, you can use the [Camera Setup] [Iris] [Zoom-Iris Correct.] setting to select whether to maintain the f/stop as you zoom.
- If you set an assignable button to [Iris +] or [Iris -] (107), you can press the button to respectively open up or close the aperture.
- When an optional RC-V100 Remote Controller is connected to the camcorder, you can adjust the aperture with the remote controller's IRIS dial. At default settings, turn the dial right to open up the aperture (smaller F value) and left to close the aperture (larger F value).

Downloaded From camera-usermanual.com Canon Manuals

Momentary Automatic Aperture - Push Auto Iris

During manual aperture, you can press the PUSH AUTO IRIS button to have the camcorder temporarily take control and automatically adjust the aperture (f/stop) for an optimal exposure.

[Camera Setup]
[Iris]
[Mode]
[Manual]

1 Open the aperture [Mode] submenu.
[Camera Setup] [Iris] [Mode]
- This setting is available only when an EF lens compatible with automatic aperture is attached to the camcorder.
- For non-compatible lenses, the aperture mode will be set to [Manual] and cannot be changed.

2 Select [Manual] and then press the joystick.

3 Hold down the PUSH AUTO IRIS button.
- The camcorder will automatically adjust the aperture to obtain optimal exposure as long as you hold the button pressed down. Also, **A** will appear on the screen next to the aperture value.
- When you release the button, the selected f/stop will be set as the aperture value. Automatic aperture mode will end and the **A** icon next to the aperture value will disappear.

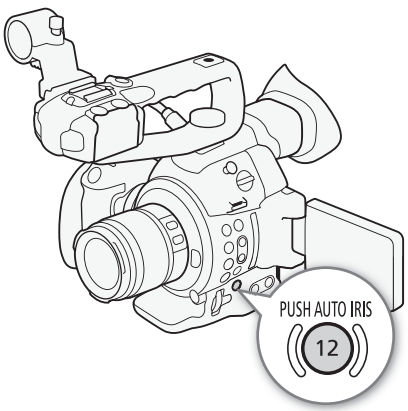

Remote Operation Using Browser Remote

After completing the necessary preparations (153), you can activate the push auto iris function remotely from a Wi-Fi enabled device using the Browser Remote application.

1 On the camcorder, set [Camera Setup] [Iris] [Mode] to [Manual] (63).

2 Press [PUSH AUTO IRIS].
- The camcorder will automatically adjust the aperture to obtain optimal exposure. During the adjustment, **A** will appear on the camcorder's screen next to the aperture value.
- During the automatic adjustment, the aperture value on the Browser Remote screen will be grayed out. Once the adjustment is finished, the aperture value will turn black and be available again.

Compatible EF Lenses

The following lenses are compatible with push auto iris, automatic aperture and face AF (76).
- EF-S10-18mm f/4.5-5.6 IS STM
- EF-S18-135mm f/3.5-5.6 IS STM
- EF-S18-55mm f/3.5-5.6 IS STM
- EF-S55-250mm f/4-5.6 IS STM

Downloaded From camera-usermanual.com Canon Manuals

Automatic Aperture

When a compatible lens is attached to the camcorder, you can have the camcorder automatically adjust the aperture (f/stop).

1 Open the aperture [Mode] submenu.

[Camera Setup] [Iris] [Mode]

- This setting is available only when an EF lens compatible with automatic aperture is attached to the camcorder.
- For non-compatible lenses, the aperture mode will be set to [Manual] and cannot be changed.

2 Select [Automatic] and then press the joystick.

- The camcorder will automatically adjust the aperture to obtain optimal exposure. Also, **A** will appear on the screen next to the aperture value.

[Camera Setup]
[Iris]
[Mode]
[Manual]

NOTES

- If you set an assignable button to [Iris Mode] (107), you can press the button to change the aperture mode.

Exposure Compensation - AE Shift

Use AE shift to compensate the exposure that was set using automatic aperture or push auto iris, in order to darken or lighten the image.

1 Open the [AE Shift] submenu.

[Camera Setup] [AE Shift]

2 Select an AE shift level and then press the joystick.

[Camera Setup]
[AE Shift]
[±0]

Available AE shift levels

+2.0	+1.75	+1.5	+1.25	+1.0	+0.75	+0.5	+0.25	±0
-0.25	-0.5	-0.75	-1.0	-1.25	-1.5	-1.75	-2.0	

Remote Operation Using Browser Remote

After completing the necessary preparations (153), you can use AE shift remotely from a Wi-Fi enabled device using the Browser Remote application.

Press [IRIS +] and [IRIS -]to adjust the AE shift level.

NOTES

- You can also set the AE shift level by turning the control dial while holding the PUSH AUTO IRIS button pressed down.

Downloaded From camera-usermanual.com Canon Manuals

- If you set an assignable button to [AE Shift +] or [AE Shift -] (107), you can press the button to adjust the AE shift level.
- When you use automatic aperture (including push auto iris) after setting an AE shift level, the camcorder will try to adjust the aperture (f/stop) so as to achieve the AE shift level that was set rather than optimal aperture.

The Exposure Bar

The ▼ on top of the exposure bar indicates optimal exposure without any shift (AE±0); the scale markings indicate the deviation from optimal exposure in 1/2 EV increments. The indicator inside the exposure bar represents the current exposure. When the difference between current and optimal exposure is larger than ±2 EV, the indicator will flash at the edge of the exposure bar. Optimal exposure will change depending on the light metering mode (67) used.

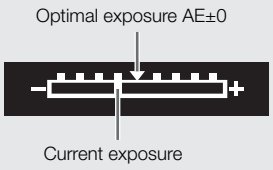

Light Metering Mode

Select the light metering mode to match the recording conditions. Using the appropriate setting will ensure that the camcorder obtains the most suitable exposure level when automatic aperture (including push auto iris) is used.

1 Open the [Light Metering] submenu.
[Camera Setup] [Light Metering]

2 Select the desired option and then press the joystick.
- The icon of the selected mode appears on the left of the screen.

[Camera Setup]
[Light Metering]
[Standard]

Options

[Backlight] : Suitable when recording backlit scenes.
[Standard]: Averages the light metered from the entire screen, giving more weight to the subject in the center.
[Spotlight] : Use this option when recording a scene in which only a certain part of the picture is lit, for example, when the subject is lit by a spotlight.

NOTES

- If you set an assignable button to [Backlight] or [Spotlight] (107), you can press the button to change the light metering mode.

Downloaded From camera-usermanual.com Canon Manuals

White Balance

The camcorder uses an electronic white balance process to calibrate the picture and ensure accurate colors under different lighting conditions. There are 4 methods of setting the white balance.

Custom white balance: You can use a gray card or white object with no pattern to establish the white balance and set it to one of two custom white balance positions, A or B.

Preset white balance: Set the white balance to (daylight) or (incandescent lamp). Preset white balance settings can be further fine-tuned within a range of -9 to 9.

Set color temperature: Allows you to set the color temperature between 2,000 K and 15,000 K.

Auto white balance: The camcorder automatically adjusts the white balance to the optimal level.

Operating modes: CAMERA MEDIA | AVCHD MP4

NOTES

- The [Color Matrix] (117) and [White Balance] (118, 120) custom picture settings take precedence over the white balance settings.
- You can use the [Other Functions] [Custom Function] [Shockless WB] setting (121) to make the transition look smoother when you change the white balance settings.
- When an optional RC-V100 Remote Controller is connected to the camcorder, you can adjust the white balance with the remote controller's AWB button, A button, B button, PRESET button and button.

Custom White Balance

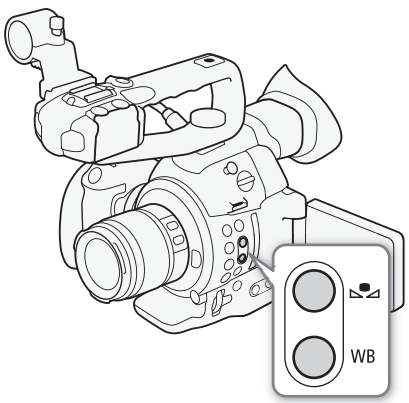

1 Press the WB button.

- The white balance mode icon will be highlighted in orange.
- You can also select the white balance mode icon using only the joystick (56).

2 Push the joystick up/down to select the A or B icon.

- If a custom white balance has been stored previously, press the joystick to set the stored custom white balance. You do not need to perform the rest of the procedure.
- If a custom white balance has not yet been stored, the custom white balance icon A or B and default value (5,500 K) will flash slowly.
- Continue the procedure to establish the custom white balance.

3 Point the camcorder at a gray card or white object so that it fills the whole screen.

- Use the same lighting conditions you plan to use when recording.

4 Press the button.

- The A or B icon will flash quickly.
- Make sure the gray card or white object fills the screen until the procedure is completed.
- After the icon stops flashing, the procedure is completed. The setting is retained even if you turn off the camcorder.

NOTES

- Readjust the custom white balance if the light source or ND filter setting changes.
- Very rarely and depending on the light source, may keep flashing (it will change to a slow flashing). The result will still be better than with the auto white balance.

Downloaded From camera-usermanual.com Canon Manuals

- Custom white balance may provide better results in the following cases:
  - Changing lighting conditions
  - Close-ups
  - Subjects in a single color (sky, sea or forest)
  - Under mercury lamps and certain types of fluorescent and LED lights

Preset White Balance Settings

1 Press the WB button.
- The white balance mode icon will be highlighted in orange.
- You can also select the white balance mode icon using only the joystick (56).

2 Push the joystick up/down to select the ☀ or ☀ icon and then press the joystick.
- If necessary, instead of pressing the joystick, you can continue the procedure to fine-tune the preset settings within a range of -9 to 9.

3 Press the button.
- The adjustment value ±0 will appear next to the white balance icon, highlighted in orange.

4 Push the joystick up/down to change the adjustment value and then press the joystick.
- The selected adjustment value will be set and will appear next to the white balance icon.

Color Temperature Setting

1 Press the WB button.
- The white balance mode icon will be highlighted in orange.
- You can also select the white balance mode icon using only the joystick (56).

2 Push the joystick up/down to select the K icon.

3 Press the button.
- The default color temperature value (5,500 K) will be highlighted in orange.

4 Push the joystick up/down to change the color temperature value and then press the joystick.
- The selected color temperature will be set and will appear next to the white balance icon.

Auto White Balance

The camcorder constantly adjusts the white balance automatically to achieve an optimal level. The camcorder will adjust the white balance if the light source changes.

1 Press the WB button.
- The white balance mode icon will be highlighted in orange.
- You can also select the white balance mode icon using only the joystick (56).

2 Push the joystick up/down to select the AWB icon and then press the joystick.
- The AWB icon appears next to the color temperature display.

Downloaded From camera-usermanual.com Canon Manuals

Remote Operation Using Browser Remote

After completing the necessary preparations (153), you can adjust the white balance remotely from a Wi-Fi-enabled device using the Browser Remote application.

1 Press [A] on the Browser Remote screen.

2 Select the desired white balance mode.

- For auto white balance, select [AWB].

If you selected K, ☀ or ☀:

3 Press the adjustment value [WB ±0] (☀, ☀) or color temperature [5500K] (K) and then select the desired value from the list.

- You may need to scroll up/down to see all the available values.
- The selected value will be displayed on the Browser Remote screen and will be applied on the camcorder.

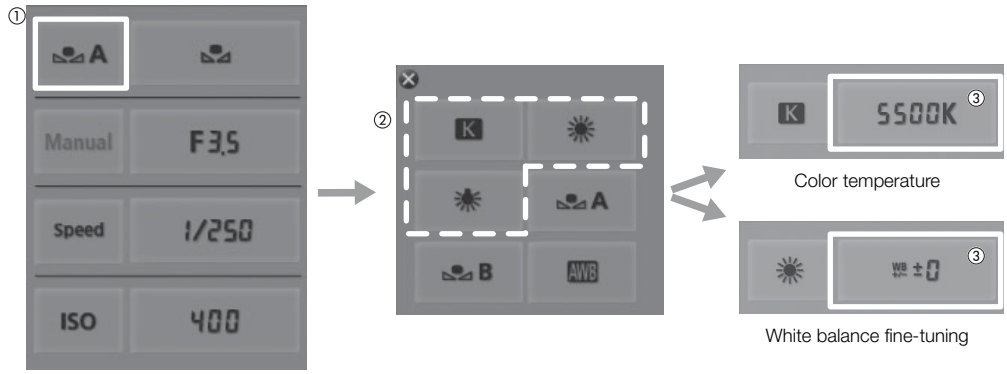

If you selected A or B:

3 Point the camcorder at a gray card or white object so that it fills the whole screen.

- Use the same lighting conditions you plan to use when recording.
- Make sure the gray card or white object fills the screen until the procedure is completed.

4 Press [].

- If a custom white balance has not yet been stored, [] will flash slowly.
- During the procedure, [] will flash quickly. When it stops flashing, the procedure is completed and the setting will be applied on the camcorder.

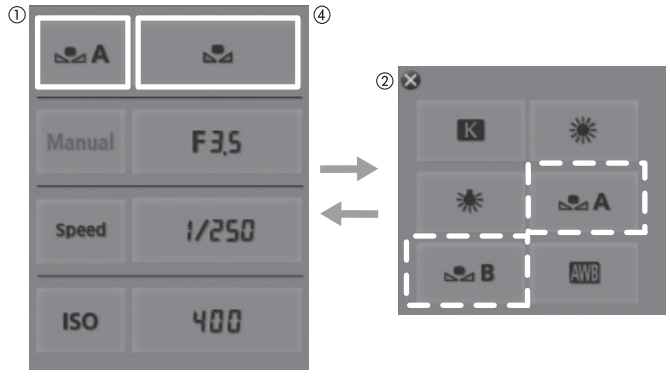

Downloaded From camera-usermanual.com Canon Manuals

Adjusting the Focus

The camcorder incorporates Dual Pixel CMOS AF technology, allowing you to use continuous AF or one-shot AF while shooting. Select the focusing method that best fulfils your needs and is most suited for the lens you are using. Refer also to the instruction manual of the lens. When using a lens included with a lens kit, refer only to the explanations in this section.

Manual focus: Turn the focus ring on the lens or use the Browser Remote application to adjust the focus. The camcorder offers several focus assistance functions to help you focus more accurately when using the manual focus.

One-shot AF*: With the lens's focus mode switch set to AF, press the ONE-SHOT AF button or use the Browser Remote application to temporarily let the camcorder focus automatically on the subject at the center of the screen.

Continuous AF*: The camcorder continuously focuses on the subject at the center of the screen. By pressing the AF LOCK button, you can change the composition of the picture while keeping the focus.

Face AF**: The camcorder automatically detects a person's face, focuses on it and can track it if that person moves.

* Available when an EF lens (except manual focus lenses) is attached to the camcorder.
**Available only with compatible EF lenses (65).

Operating modes: CAMERA MEDIA | AVCHD MP4

Focusing methods and required settings

Focusing method		Focus mode switch on the EF lens	AF mode[1]
Manual focus	Focus ring	MF or AF[2]	–
	Browser Remote	AF	
One-shot AF	ONE-SHOT AF button	AF	[One Shot]
	Browser Remote		
Continuous AF	Camcorder menu	AF	[Continuous]
	Browser Remote		
Face AF	Camcorder menu	AF	–
	Browser Remote		

[1] [Camera Setup] > [AF] > [Mode].
[2] Depending on the lens, the focus ring may be disabled when the focus mode switch is set to AF.

Manual Focus

Using the Focus Ring

1 Set the focus mode with on the lens to MF (manual focus) mode.
- [MF] will appear on the screen.

2 Turn the focus ring to adjust the focus.
- With some EF lenses, you may be able to operate the focus ring even when the focus mode switch on the lens is set to AF.

Remote Operation Using Browser Remote

After completing the necessary preparations (153), you can adjust the focus remotely from a Wi-Fi-enabled device using the Browser Remote application.

1 Set the focus mode switch on the lens to AF (autofocus) mode.

Downloaded From camera-usermanual.com Canon Manuals

- [AF] will appear on the left of the screen.

2 Press the [FOCUS] controls to adjust the focus as necessary.

- Press one of the controls on the [NEAR] side to focus closer or one of the controls on the [FAR] side to focus farther away.
- There are three levels of adjustment - [‹]/[›] is the smallest and [«]/[»] the largest.

NOTES

- Depending on the lens used, focus adjustment may not be possible.
- If you operate the zoom after focusing manually, the focus on the subject may be lost.
- When adjusting the focus, be careful not to touch the front of the lens or moving parts on the lens except for the focus ring.
- If you focus manually and then leave the camcorder with the power turned on, the focus on the subject may be lost after a while. This possible slight shift in focus is a result of the internal temperature rising in the camcorder and lens. Check the focus before resuming shooting.
- When an optional RC-V100 Remote Controller is connected to the camcorder, you can adjust the focus with the remote controller's FOCUS dial. At default settings, turn the dial right to focus farther and left to focus nearer.

Using the Focus Assistance Functions

In order to focus more accurately, you can use two focus assistance functions – peaking, which creates a clearer contrast by emphasizing the outlines of the subject, and magnification, which enlarges the image on the screen. You can use both functions simultaneously for greater effect.
You can also use the [Other Functions] ▶ [Custom Function] ▶ [Focus Assistance B&W] setting (📖 121) to switch the screen to black & white while using the focus assistance functions.

Peaking

The camcorder offers two peaking levels. Select the level before activating peaking.

1 Press the PEAKING button.

- The peaking icon (PEAK1 or PEAK2) appears at the lower center of the screen and the outlines in the image will be emphasized, depending on the focus.
- Press the button again to turn off peaking.
- Alternatively, you can use the [OLED/VF Setup] ▶ [Peaking] ▶ [Setting] setting to turn peaking on and off.

2 Open the peaking [Select] submenu to select the peaking level.
[OLED/VF Setup] ▶ [Peaking] ▶ [Select]

3 Select the desired level and then press the joystick.

[OLED/VF Setup]
[Peaking]
[Select]
[Peaking 1]

Downloaded From camera-usermanual.com Canon Manuals

Magnification

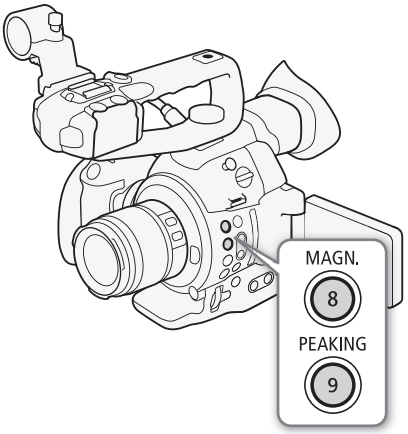

1 Press the MAGN. button.
   - MAGN. appears at the lower center of the screen and the center of the screen is magnified approximately 2 times*.

2 If you need to move around the magnification frame to check other parts of the image, use the joystick (▲▼ ◀▶).
   - You can move the orange frame 5 steps vertically or horizontally. Press the CANCEL button to return the magnification frame to the center position.

3 Press the MAGN. button again to cancel the magnification.

* The magnification that appears on the OLED screen and on the viewfinder screen is different. The magnification also differs based on the video configuration.

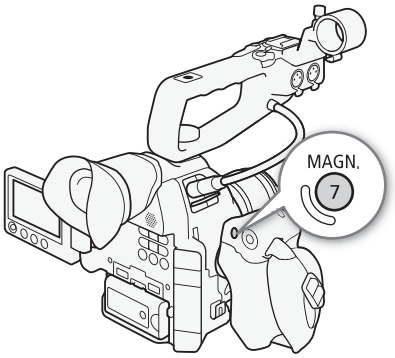

NOTES

- Peaking/Magnification appears only on the camcorder screen. It will not appear on an external monitor connected to the camcorder and will not appear in your recordings.
- You can use the [OLED/VF Setup] ❯ [Peaking] ❯ [Peaking 1] and [Peaking 2] settings to set the color, gain and frequency of the two peaking levels independently of each other.
- You can use the [Other Functions] ❯ [Custom Function] ❯ [Magn. Add. Disp.] setting (📖 121) to select an additional assistance display (peaking or the edge monitor) to also be displayed when magnification is used.
- The camcorder features professional video scopes (📖 92). You can display the edge monitor to help you focus even more accurately.
- You can use peaking together with the edge monitor. In such case, The gain and frequency of the peaking effect will be adjusted automatically according to the gain settings of the edge monitor.

Downloaded From camera-usermanual.com Canon Manuals

One-Shot AF

[Camera Setup] > [AF] > [Mode] > [One Shot]

When an EF lens (except for manual focus lenses) is attached to the camcorder, you can use the one-shot AF function during manual focus to have the camcorder focus automatically only once on the subject at the center of the screen.

1 Set the focus mode switch on the lens to AF in advance.
- Refer to the instruction manual of the lens used.
- [AF] will appear on the left of the screen.
- By default, the AF mode is set to one-shot AF. If it has been changed, continue to step 2. If it is already set to one-shot AF, skip to step 4.

2 Open the AF [Mode] submenu.
[Camera Setup] > [AF] > [Mode]

3 Select [One Shot] and then press the joystick.

4 Press and hold the ONE-SHOT AF button.
- The AF frame will appear at the center of the screen and the camcorder will focus automatically. When correct focus has been achieved, the AF frame turns green.
- If the camcorder cannot focus automatically, the AF frame will turn red.

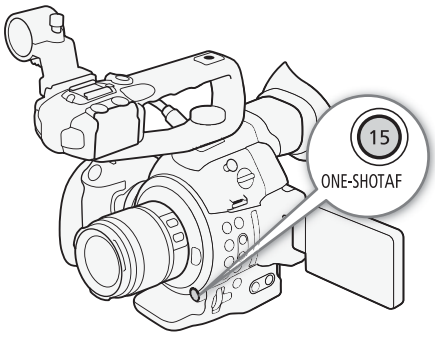

- When you are using Face AF, a white detection frame will appear around the face of the person who has been determined to be the main subject. Gray frames will appear around the faces of other subjects.
- The AF frame will disappear when you release the ONE-SHOT AF button.

NOTES
- One-shot AF is not available when face AF is set to [Face Only] and a face has not been detected.

Continuous AF

When an EF lens (except for manual focus lenses) is attached to the camcorder, you can have the camcorder focus automatically.

[Camera Setup] > [AF] > [Mode] > [One Shot]

1 Set the focus mode switch on the lens to AF in advance.
- Refer to the instruction manual of the lens used.
- [AF] will appear on the left of the screen.

2 Open the AF [Mode] submenu.
[Camera Setup] > [AF] > [Mode]

3 Select [Continuous] and then press the joystick.
- A white frame will appear in the center of the screen.

Downloaded From camera-usermanual.com Canon Manuals

Activating AF Lock

Press the AF LOCK button.

- The frame at the center of the screen will turn gray and the focus will be locked. Press the button again to deactivate AF lock.

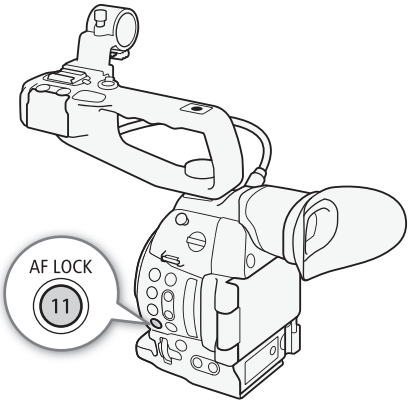

Remote Operation Using Browser Remote

After completing the necessary preparations (153), you can use the one-shot AF and continuous AF functions remotely from a Wi-Fi enabled device using the Browser Remote application.

1 Set the focus mode switch on the lens to AF in advance.

To Use Continuous AF

2 Press [AF MODE] so that the ONE-SHOT AF/AF LOCK button displays [AF LOCK].

3 If necessary, press [AF LOCK] to activate AF lock.

- The frame at the center of the screen will turn gray and the focus will be locked. Press the button again to deactivate AF lock.

To Use One-shot AF

2 Press [AF MODE] so that the ONE-SHOT AF/AF LOCK button displays [ONE-SHOT AF].

3 Press [ONE-SHOT AF] to activate one-shot AF.

- An AF frame appears at the center of the live view screen and the camcorder will focus automatically.
- The AF frame turns green (correct focus) or red (when the camcorder cannot focus automatically) and then disappears after a few seconds.

NOTES

- The point where the camcorder focuses may change slightly depending on shooting conditions, such as subject, brightness and zoom position. Check the focus before resuming shooting.
- When an optional RC-V100 Remote Controller is connected to the camcorder, you can adjust the focus with the remote controller's FOCUS dial. At default settings, turn the dial right to focus farther and left to focus nearer.
- Autofocus may not work well when [Camera Setup] [ISO/Gain] [Extended Range] is set to [On] and an ISO speed or gain value in the extended range is selected.
- One-shot AF is not available when the shutter speed mode is set to [Slow] and the shutter speed is set to 1/4 or 1/3.
- Autofocus may take longer in the following cases.
  - When the frame rate (set in the video configuration) or shooting frame rate is set to PF29.97, 29.97P, 23.98P, PF25.00 or 25.00P.
  - With some EF lenses, the camcorder may take longer to focus automatically or may not be able to focus correctly. Visit your local Canon Web site for the latest information.
- Dual Pixel CMOS AF will not work in the following cases.
  - When using an optional EF Extender.
  - When face AF is set to [Face Priority] and a face is detected.
  - When face AF is set to [Face Only].

Downloaded From camera-usermanual.com Canon Manuals

- Continuous AF will not work in the following cases.
  - When using an EF lens that does not have a focus mode switch.
  - While adjusting the aperture, except when using an EF lens compatible with face AF (📖 65).
  - While adjusting the focus using a remote controller attached to the REMOTE terminal.
- Autofocus may not work well on the following subjects or in the following cases. In such case, focus manually.
  - Reflective surfaces
  - Subjects with low contrast or without vertical lines
  - Fast moving subjects
  - Through dirty or wet windows
  - Night scenes

Detecting and Focusing On Faces (Face AF)

[Camera Setup] > [AF] > [Face AF] > [Off]

When using a compatible EF lens (📖 65), the camcorder can detect a person's face during autofocus mode, automatically focus on it, and even track it if the person moves. When there are a number of people in the picture, one person (with the white face detection frame) will be determined to be the main subject and the camcorder will focus on that person's face. You can also change the person selected as main subject.

1 Set the focus mode switch on the lens to AF in advance.
- Refer to the instruction manual of the lens used.
- [AF] will appear on the left of the screen.

2 Open the [Face AF] submenu.
[Camera Setup] > [AF] > [Face AF]

3 Select the desired option and then press the joystick.
- or will appear on the left of the screen.

4 Point the camcorder at the subject.
- If there is more than one person in the picture, the camcorder will automatically select one person it determines is the main subject. The camcorder will indicate the main subject with a white face detection frame and other faces with gray frames.
- will appear in white when a face is detected and in gray when a face is not detected.
- If necessary, push the joystick left/right to change the main subject when there is more than one person.
- If necessary, you can use AF lock (📖 75)

Options

[Face Priority] : When there is no face detected, the camcorder focuses automatically on the subject at the center of the screen.
[Face Only] : The camcorder locks the focus.
[Off]: Standard autofocus operation with no face detection.

Downloaded From camera-usermanual.com Canon Manuals

Activating AF Lock

[Camera Setup] > [AF] > [Mode] > [One Shot]

1 Open the AF [Mode] submenu.
[Camera Setup] ❯ [AF] ❯ [Mode]

2 Select [Continuous] and then press the joystick.
- A white frame will appear in the center of the screen.

3 Press the AF LOCK button.
- The frame at the center of the screen will turn gray and the focus will be locked. Press the button again to deactivate AF lock.

Remote Operation Using Browser Remote

After completing the necessary preparations (📖 153), you can use the face AF function remotely from a Wi-Fi-enabled device using the Browser Remote application.

1 Activate face AF (📖 76, steps 1 to 3).

2 Point the camcorder at a subject.

To Use AF Lock

3 Press [AF MODE] so that the ONE-SHOT AF/AF LOCK button displays [AF LOCK].

4 Press [AF LOCK].
- The frame at the center of the screen will turn gray and the focus will be locked. Press the button again to deactivate AF lock.

To Use One-shot AF

3 Press [AF MODE] so that the ONE-SHOT AF/AF LOCK button displays [ONE-SHOT AF].

4 Press [ONE-SHOT AF].
- The camcorder will start focusing and a focus icon will appear on the Browser Remote screen. The icon's color indicates the following.
  - White: Focusing.
  - Green: Focus achieved.
  - Red: Unable to focus.

NOTES

- The camcorder may mistakenly detect the faces of non-human subjects. In such case, turn face detection off.
- In certain cases, faces may not be detected correctly. Typical examples include:
  - Faces extremely small, large, dark or bright in relation to the overall picture.
  - Faces that are turned to the side, at a diagonal or partially hidden.
- Face AF cannot be used when the shutter speed is slower than 1/30 (1/24 if the frame rate is 23.98P) for 59.94 Hz recordings or slower than 1/25 for 50.00 Hz recordings.
- If you set an assignable button to [Face AF] (📖 107), you can press the button to switch between the face detection options.

Downloaded From camera-usermanual.com Canon Manuals

Onscreen Markers and Zebra Patterns

Using onscreen markers allows you to make sure your subject is correctly framed and is within the appropriate safe area. The zebra patterns help you identify areas that are overexposed. The onscreen markers and zebra pattern will not appear in your recordings.

Operating modes: CAMERA MEDIA | AVCHD MP4

Displaying Onscreen Markers

The camcorder offers 5 types of onscreen markers. You can display multiple onscreen markers simultaneously.

[OLED/VF Setup]
[Markers]
[Center]
[Horizontal]
[Grid]
[Safe Area]
[Aspect Marker]
[Off]

1 Open the [Markers] submenu.
[OLED/VF Setup] [Markers]

2 Select a marker you wish to display, select [Black] or [Gray] and then press the joystick.
- Select [Off] to turn off the selected marker.
- You can display multiple markers simultaneously. Repeat this step as necessary.
- If you selected [Safe Area] or [Aspect Marker], continue to step 3. Otherwise, you can skip to step 4.

3 Select [Safe Area Setting] or [Aspect Ratio], select the desired option and then press the joystick.

4 Select [Enable], select [On] and then press the joystick to enable the onscreen markers.
- All of the selected onscreen markers will be displayed.
- Select [Off] to turn off all onscreen markers.

Options

[Center]:	Displays a small marker that indicates the center of the screen.
[Horizontal]:	Displays a horizontal line to help you compose level shots.
[Grid]:	Displays a grid that allows you to frame your shots correctly (horizontally and vertically).
[Safe Area]:	Displays indicators that show various safe areas, such as the action safe area and text safe area. Available options for [Safe Area Setting] are [80%], [90%], [92.5%] and [95%].
[Aspect Marker]:	Displays markers that indicate various aspect ratios to help you keep your shot within that area. Available options for [Aspect Ratio] are [4:3], [13:9], [14:9], [1.66:1], [1.75:1], [1.85:1] and [2.35:1].

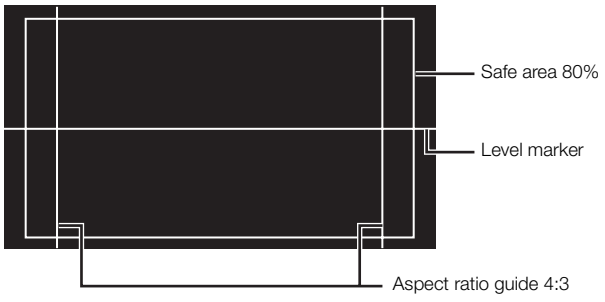

Downloaded From camera-usermanual.com Canon Manuals

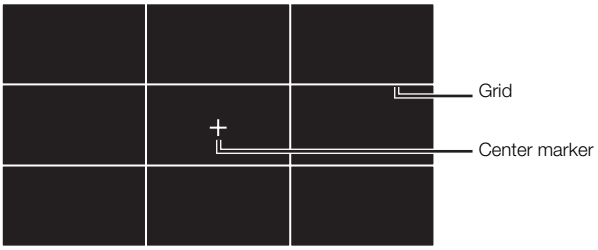

NOTES

- You can turn off all other onscreen displays, leaving only the onscreen markers (52).
- If you set an assignable button to [Markers] (107), you can press the button to turn the onscreen markers on and off.

Displaying Zebra Patterns

The camcorder has a zebra pattern feature that shows black and white diagonal stripes over areas that are overexposed. This is displayed only on the screen and will not appear in your recordings. There are two types of zebra patterns and you can display both simultaneously. Zebra 1 lets you identify areas within a certain range (±5% of a specified level) while zebra 2 lets you identify areas that are over a specified level. When you display both simultaneously and they overlap, only zebra 1 will be displayed in those areas.

[OLED/VF Setup]
[Zebra]
[Select]
[Zebra 1]

1 Open the zebra pattern [Select] submenu.
[OLED/VF Setup] [Zebra] [Select]

2 Select [Zebra 1], [Zebra 2] or [Zebra 1&2] and then press the joystick.

3 Open the zebra level submenu.
[OLED/VF Setup] [Zebra] [Zebra 1 Level] or [Zebra 2 Level]

4 Select a zebra level and then press the joystick.

5 Press the ZEBRA button to activate the selected zebra pattern.
- Alternatively, before closing the menu, you can also select [Setting], select [On] and then press the joystick.

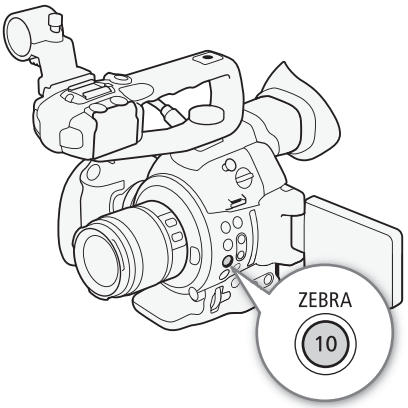

NOTES

- You can use the [OLED/VF Setup] [Zebra] [HD Output] setting to display the zebra pattern on an external monitor connected to the HDMI OUT terminal (HD output only), except when the output signal is 1080/59.94P or 1080/50.00P.

Downloaded From camera-usermanual.com Canon Manuals

Setting the Time Code

The camcorder generates a time code signal and embeds it in your recordings. You can output the time code signal from the HDMI OUT terminal (📖 170).

Operating modes: CAMERA MEDIA | AVCHD MP4

Selecting the Running Mode

You can select the running mode of the camcorder's time code.

[00:00 TC/UB Setup] > [Time Code] > [Mode] > [Preset]

[00:00 TC/UB Setup] > [Time Code] > [Run] > [Rec Run]

1 Open the time code [Mode] submenu.
[00:00 TC/UB Setup] > [Time Code] > [Mode]

2 Select the desired option and then press the joystick.

- If you selected [Regen.], you do not need to perform the rest of this procedure. If you selected [Preset] and would like to set the time code's initial value, see the following section *Setting the Time Code's Initial Value*.

3 After you select [Preset], open the time code [Run] submenu.
[00:00 TC/UB Setup] > [Time Code] > [Run]

4 Select the desired option and then press the joystick.

Options

[Preset]: The time code starts from an initial value you can select in advance. The default initial time code is 00:00:00.00. The time code's running mode depends on the [Run] setting.

- [Rec Run]: The time code runs only while recording so clips recorded consecutively on the same SD card will have continuous time codes.
- [Free Run]: The time code starts running the moment you press the joystick to select this option and keeps running regardless of the camcorder's operation.

[Regen.]: The camcorder will read the selected SD card and the time code will continue from the last recorded time code on the SD card. The time code runs only while recording so clips recorded consecutively on the same SD card will have continuous time codes.

Setting the Time Code's Initial Value

If you set the time code mode to [Preset], you can set the initial value of the time code.

[00:00 TC/UB Setup] > [Time Code] > [Setting]

1 Open the time code [Setting] submenu.
[00:00 TC/UB Setup] > [Time Code] > [Setting]

2 Select [Set] and then press the joystick.

- The time code setting screen appears with an orange selection frame indicating the hours.
- To reset the time code to [00:00:00.00], select [Reset] instead. If the running mode is set to [Free Run], the time code will be reset the moment you press the joystick and keep running continuously from 00:00:00.00.

Downloaded From camera-usermanual.com Canon Manuals

3 Push the joystick up/down to set the hours and then press the joystick to move to the minutes.

4 Change the rest of the fields (minutes, seconds, frame) in the same way.
- Press the CANCEL button to close the screen without setting the time code.

5 Select [Set] and then press the joystick to close the screen.
- If the running mode is set to [Free Run], the time code will start running from the selected time code the moment you press the joystick.

Selecting Drop or Non-Drop Frame

[00:00 TC/UB Setup] > [Time Code] > [DF/NDF] > [DF]

When [Other Functions] > [System Frequency] is set to [59.94 Hz], you can select between a drop frame (DF) or non-drop frame (NDF) time code, depending on how you plan to use your recordings.
In the following cases, the time code is set to non-drop frame (NDF) and cannot be changed.
- [Other Functions] > [System Frequency] is set to [50.00 Hz]
- [Other Functions] > [System Frequency] is set to [59.94 Hz] and the frame rate is set to 23.98P

1 Open the [DF/NDF] submenu.
[00:00 TC/UB Setup] > [Time Code] > [DF/NDF]

2 Select [DF] or [NDF] and then press the joystick.
- The time code display will differ depending on the setting. When you select [DF], the time code will appear as [00:00:00.00]; when you select [NDF], it will appear as [00:00:00:00].

Putting the Time Code Display on Hold

If you set an assignable button to [Time Code Hold] (📖 107), you can press the button to freeze the display of the time code. While the time code display is put on hold, [H] will appear on the screen next to the time code. The time code continues to run normally while the time code display is on hold. When you resume the time code display, the current time code will be displayed.

About the Time Code Display

An icon may appear next to the time code depending on the operation. Refer to the following table.

Icon	Description
R	The time code is set to [Regen.].
P	The time code is set to [Preset] and the running mode is set to [Rec Run].
F	The time code is set to [Preset] and the running mode is set to [Free Run].
H	Time code display is on hold.
No icon	Time code during clip playback.

Downloaded From camera-usermanual.com Canon Manuals

NOTES

- When the frame rate is set to 23.98P, the frames value in the time code runs from 0 to 23. When the frame rate is set to 50.00i, PF25.00 or 25.00P, it runs from 0 to 24. With other frame rates, it runs from 0 to 29.
- When you are using slow & fast motion recording mode, you cannot select the [Free Run] running mode. Conversely, when you are using pre-recording mode, [Free Run] is set automatically and cannot be changed.
- When you mix drop frame and non-drop frame time codes, there might be a discontinuity in the time code at the point where the recording starts.
- As long as the built-in rechargeable lithium battery is charged and you selected the [Free Run] running mode, the time code continues to run even if you disconnect all other power sources. However, this is less accurate than when the camcorder is on.
- If you set an assignable button to [Time Code] (📖 107), you can press the button to open the [**00:00** TC/UB Setup] ❯ [Time Code] submenu.

Downloaded From camera-usermanual.com Canon Manuals

Setting the User Bit

The user bit display can be selected from the date or the time of recording, or an identification code consisting of 8 characters in the hexadecimal system. There are sixteen possible characters: the numbers 0 to 9 and the letters A to F. The camcorder can embed the user bit in your AVCHD clips and output it from the HDMI OUT terminal.

[00:00 TC/UB Setup] > [User Bit] > [Type] > [Setting]

Operating modes: CAMERA MEDIA | AVCHD MP4*

* The user bit cannot be embedded in MP4 clips.

1 Open the user bit [Type] submenu.
[00:00 TC/UB Setup] ▶ [User Bit] ▶ [Type]

2 Select the desired user bit type and then press the joystick.
- Select [Setting] to set your own identification code, [Time] to use the time as user bit, or [Date] to use the date as the user bit.
- If you selected [Time] or [Date], you do not need to perform the rest of the procedure. If you selected [Setting], continue the procedure to set the identification code.

3 Select [Set] and then press the joystick.
- The user bit setting screen appears with an orange selection frame on the leftmost digit.
- To reset the user bit to [00 00 00 00], select [Reset] instead.

4 Push the joystick up/down to select the first character and then press the joystick to move to the next digit.
- Change the rest of the digits in the same way.
- Press the CANCEL button to close the screen without setting the user bit.

5 Select [Set] and then press the joystick to close the screen.

NOTES

- **User bit output**: In CAMERA mode, when the frame rate is set to 23.98P, you can output the user bit as 2:3 pulldown data by setting [00:00 TC/UB Setup] ▶ [User Bit] ▶ [Output Mode] to [Pulldown].

Downloaded From camera-usermanual.com Canon Manuals

Recording Audio

You can record audio using the monaural microphone (above the lens mount), built-in stereo microphone (on the handle unit)*, commercially available microphones (XLR terminal*, MIC terminal) or line input (XLR terminal*). Using the XLR terminals, you can select the audio input independently for channel 1 and channel 2.
When the bit rate for an AVCHD clip is set to [28 Mbps LPCM] or [24 Mbps LPCM], you can enjoy two-channel linear PCM audio recording with a sampling frequency of 48 kHz. LPCM audio playback is also available for clips recorded with those bit rates.

* Only available when the handle unit is attached to the camcorder.

Operating modes: CAMERA MEDIA | AVCHD MP4

About the monaural microphone and built-in microphone

The monaural microphone allows you to add comments while shooting, which can be synchronized to the audio and video during editing. The monaural microphone is available when neither the handle unit nor an external microphone (for the MIC terminal) is connected to the camcorder. All sound recorded through the microphone will be in mono.

The built-in microphone refers to the stereo microphone on the handle unit. Settings related to the built-in microphone are explained in the following pages.

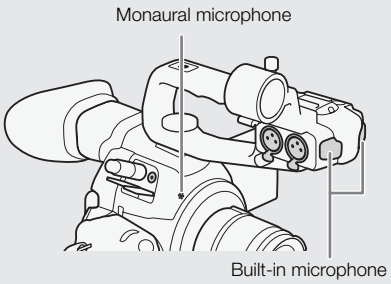

Connecting an External Microphone or External Audio Input Source to the Camcorder

To each of the XLR terminals on the handle unit, you can attach commercially available microphones or analog line in sources with an XLR connector. To the MIC terminal, you can attach commercially available condenser microphones* with their own power supply and a Ø 3.5 mm stereo mini-plug.

* For 50.00 Hz recordings, use commercially available microphones with a cable no longer than 3 m.

1 Loosen the microphone lock screw (①), open the microphone holder and insert the microphone (②).

2 Tighten the lock screw and put the microphone cable through the microphone cable clamp under the microphone holder (③).

3 Plug the microphone cable into the desired XLR terminal (④) or the MIC terminal (⑤).

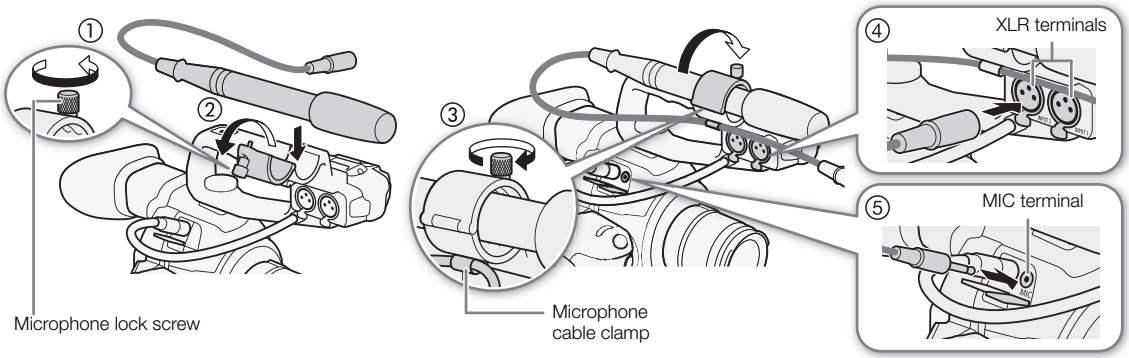

Downloaded From camera-usermanual.com Canon Manuals

Switching to the Built-in Microphone or External Microphone (MIC Terminal)

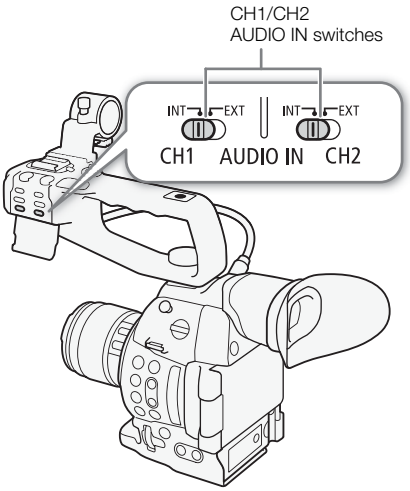

To use the built-in microphone, make sure to attach the handle unit in advance.

Set the CH1/CH2 AUDIO IN switch to INT.

- Audio can be recorded using the built-in microphone or a microphone connected to the MIC terminal.
- If you connect a microphone to the MIC terminal while the AUDIO IN switch is set to INT, the camcorder will switch automatically from the built-in microphone to the external microphone.

Adjusting the Audio Level for the Built-in Microphone and an External Microphone (MIC Terminal)

You can adjust the audio recording level of the built-in microphone or a microphone attached to the MIC terminal to auto or manual. The way to adjust the audio level depends on whether the handle unit is attached to the camcorder.

When the Handle Unit is Attached

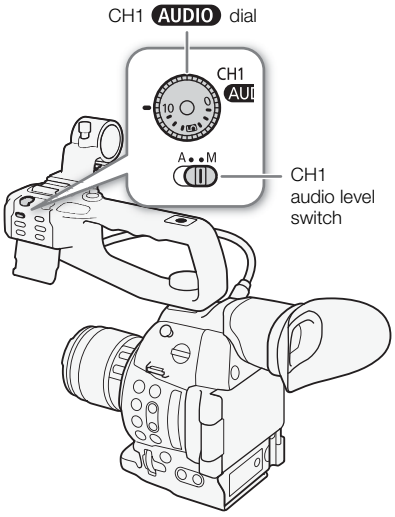

With the handle unit attached, the audio level adjustment is done using the audio controls on the handle unit.

1 Select the audio level adjustment mode with the CH1 audio level switch.
   - **Automatic audio level adjustment:** Set the CH1 audio level switch to A. You do not need to perform the rest of the procedure.
     Manual audio level adjustment: Set the CH1 audio level switch to M. Continue the procedure to set the microphone's audio recording level.
2 Turn the CH1 AUDIO dial to adjust the audio level.
   - For reference, 0 corresponds to -∞, 5 corresponds to 0 dB, and 10 corresponds to +18 dB.
   - As a guideline, adjust the audio recording level so that the audio level meter on the screen will go to the right of the -18 dB mark (one mark right of the -20 dB mark) only occasionally.

   - Closing the protective cover will prevent the audio controls from being changed inadvertently.

Downloaded From camera-usermanual.com Canon Manuals

When the Handle Unit is Not Attached

You can use an external microphone connected to the MIC terminal without attaching the handle unit. In such case, adjust the microphone's audio recording level using the menu.

1 Open the [MIC Mode] submenu.
[♪)) Audio Setup] ▶ [Audio Input] ▶ [MIC Mode]

2 Select [Automatic] or [Manual] and then press the joystick.
- If you selected [Automatic], you do not need to perform the rest of the procedure. If you selected [Manual], continue the procedure to set the microphone's audio recording level.

3 Open the [MIC Level] screen.
[♪)) Audio Setup] ▶ [Audio Input] ▶ [MIC Level]

4 Push the joystick up/down to set the audio recording level and then press the joystick.
- For reference, 0 corresponds to -∞, 50 corresponds to 0 dB, and 99 corresponds to +18 dB.

[♪)) Audio Setup] › [Audio Input] › [MIC Mode] › [Automatic]

[♪)) Audio Setup] › [Audio Input] › [MIC Level] › [50]

NOTES

- We recommend using headphones when adjusting the audio level. If the input level is too high, audio may become distorted even if the audio level indicator shows an appropriate level.
- If you set an assignable button to [Audio Level] (📖 107), you can press the button to turn the onscreen audio level indicator on and off.

Configuring the Low-Cut Filter

Perform the procedure below to activate the low-cut filter for the built-in microphone or external microphone connected to the MIC terminal.

1 Open the [Int. Mic Low Cut] or [MIC Low Cut] submenu.
[♪)) Audio Setup] ▶ [Audio Input] ▶ [Int. Mic Low Cut] or [MIC Low Cut]

2 Select the desired option and then press the joystick.

[♪)) Audio Setup] › [Audio Input] › [Int. Mic Low Cut] [MIC Low Cut] › [Off]

Options

[Off]: For recording audio under usual conditions.

[LC1]*: For recording mainly people's voices.

[LC2]*, [On]**: For reducing the background sound of wind when recording outdoors in windy surroundings (for example, on a beach or close to buildings). Note that when you use this setting some low-frequency sounds may be suppressed along with the sound of wind.

* Only for [Int. Mic Low Cut].
** Only for [MIC Low Cut].

Selecting the Built-in Microphone's Sensitivity

1 Open the [Int. Mic Sensitivity] submenu.
[♪)) Audio Setup] ▶ [Audio Input] ▶ [Int. Mic Sensitivity]

2 Select the desired option and then press the joystick.

[♪)) Audio Setup] › [Audio Input] › [Int. Mic Sensitivity] › [Normal]

Options

[Normal]: For recording audio under usual conditions.

[High]: For recording audio at a higher volume (+6 dB).

Downloaded From camera-usermanual.com Canon Manuals

Activating the Microphone Attenuator

If the audio level is too high and the sound sounds distorted when recording with the built-in microphone or an external microphone connected to the MIC terminal, activate the microphone attenuator (built-in microphone: 12 dB, external microphone (MIC terminal): 20 dB).

1 Open the [Int. Mic. Att.] or [MIC Att.] submenu.
[♪)) Audio Setup] ◆ [Audio Input] ◆ [Int. Mic Att.] or [MIC Att.]

2 Select [On] and then press the joystick.

[♪)) Audio Setup]
[Audio Input]
[Int. Mic Att.]
[MIC Att.]
[Off]

Downloaded From camera-usermanual.com Canon Manuals

Using Audio Input from the XLR Terminals

Using the XLR terminals CH1 and CH2, you can record audio independently to the two audio channels from a microphone or analog audio input source.

Switching Between Microphone and Line Input

1 Set the AUDIO IN switch of the desired channel to EXT.

2 Set the XLR terminal switch of the desired channel to LINE or MIC.

- To supply a microphone with phantom power, set the switch to MIC+48V instead. Make sure to connect the microphone first, before turning the phantom power on. Keep the microphone connected when turning off the phantom power.

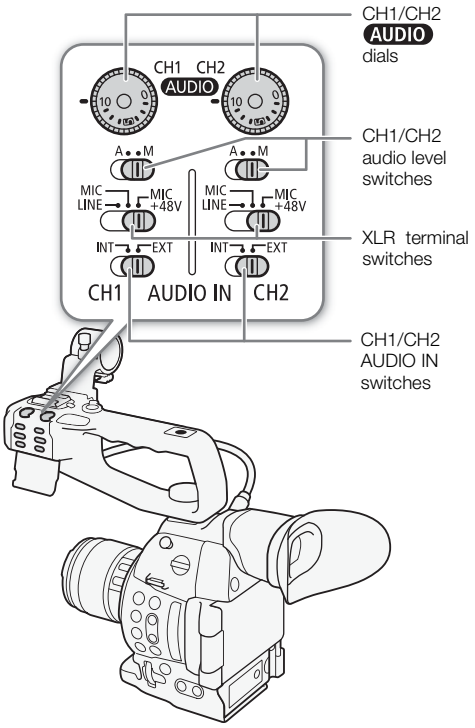

Selecting the Recording Channel

You can select to which channel the camcorder will record audio.

1 Open the [XLR Rec Channel] submenu.
[♪)) Audio Setup] ➤ [Audio Input] ➤ [XLR Rec Channel]

2 Select the desired option and then press the joystick.

[♪)) Audio Setup]
[Audio Input]
[XLR Rec Channel]
[CH1]

Options

[CH1]: Records audio to each channel separately. Audio input into CH1 is recorded to channel 1, while audio input into CH2 is recorded to channel 2.

[CH1/CH2]: Audio input into CH1 is recorded to both channels. Audio input into CH2 will not be recorded.

IMPORTANT

- When connecting a microphone or device that does not support phantom power, make sure to set the XLR terminal switch to MIC or LINE, respectively. If you set the switch to MIC+48V, the microphone or device may be damaged.

Downloaded From camera-usermanual.com Canon Manuals

Adjusting the Audio Level for the XLR Terminals

You can set the audio recording level for audio input from the XLR terminals to automatic or manual independently for each channel.

Automatic Audio Level Adjustment

Set the audio level switch of the desired channel to A (automatic) to let the camcorder automatically adjust that channel's audio level.

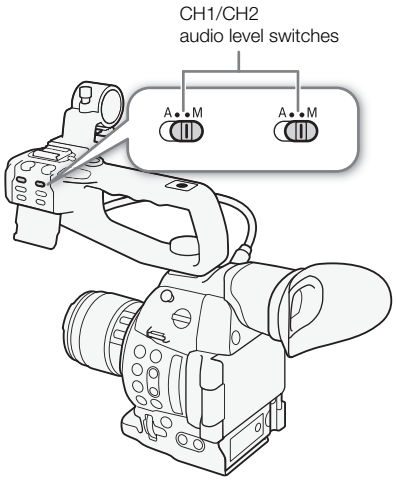

NOTES

- When both CH1 and CH2 are set to the same audio input (external microphone or external line input), if the audio level is set to automatic, you can use the [♪)) Audio Setup] ❯ [Audio Input] ❯ [XLR ALC Link] setting to link the audio level adjustment of both channels.

Manual Audio Level Adjustment

You can set the audio level for each channel manually from -∞ to 18 dB.

1 Set the audio level switch of the desired channel to M.

2 Turn the corresponding AUDIO dial to adjust the audio level.

- For reference, 0 corresponds to -∞, 5 corresponds to 0 dB, and 10 corresponds to +18 dB.
- As a guideline, adjust the audio recording level so that the audio level meter on the screen will go to the right of the -18 dB mark (one mark right of the -20 dB mark) only occasionally.

- Closing the protective cover will prevent the audio controls from being changed inadvertently.

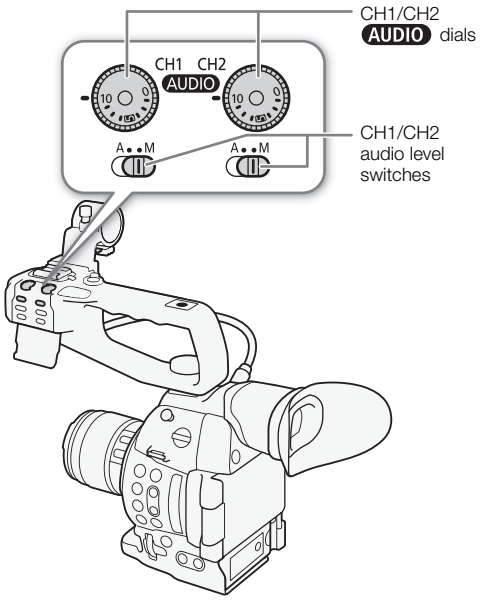

NOTES

- If at least one of the channels is set to manual audio level adjustment, you can also activate the audio peak limiter to prevent audio distortions. When activated, the audio peak limiter will limit the amplitude of audio input signals when they exceed -6 dBFS. Use the [♪)) Audio Setup] ❯ [Audio Input] ❯ [XLR Limiter] setting.
- We recommend using headphones when adjusting the audio level. If the input level is too high, audio may become distorted even if the audio level indicator shows an appropriate level.
- If you set an assignable button to [Audio Level] (📖 107), you can press the button to turn the onscreen audio level indicator on and off.

Downloaded From camera-usermanual.com Canon Manuals

Adjusting the Microphone's Sensitivity

You can adjust the microphone's sensitivity if the XLR terminal switch is set to MIC or MIC+48V.

1 Open the desired XLR terminal's sensitivity submenu.
[♪)) Audio Setup] ❯ [Audio Input] ❯ [XLR1 Mic Trimming] or [XLR2 Mic Trimming]

2 Select the desired level and then press the joystick.

Available sensitivity levels

+12 dB	+6 dB	0 dB	-6 dB	-12 dB

[♪)) Audio Setup]
[Audio Input]
[XLR1 Mic Trimming]
[XLR2 Mic Trimming]
[0 dB]

Activating the Microphone's Attenuator

You can activate the microphone's attenuator (20 dB) if the XLR terminal switch is set to MIC or MIC+48V.

1 Open the desired XLR terminal's microphone attenuator submenu.
[♪)) Audio Setup] ❯ [Audio Input] ❯ [XLR1 Mic Att.] or [XLR2 Mic Att.]

2 Select [On] and then press the joystick.

[♪)) Audio Setup]
[Audio Input]
[XLR1 Mic Att.]
[XLR2 Mic Att.]
[Off]

Monitoring the Audio with Headphones

Connect headphones* with a ∅ 3.5 mm stereo mini-plug to the ∩ (headphone) terminal to monitor the recorded audio. You can adjust the headphone volume with the [♪)) Audio Setup] ❯ [Audio Output] ❯ [Headphone Volume] setting.

* For 50.00 Hz recordings, use commercially available headphones with a cable no longer than 3 m.

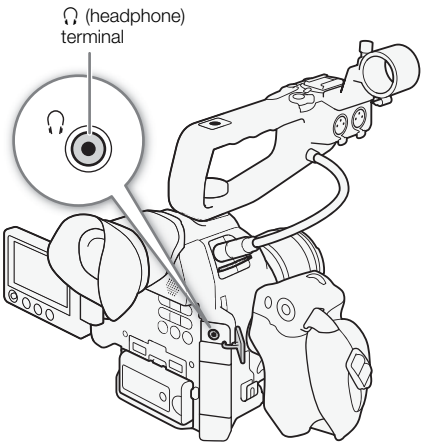

NOTES

- If you set an assignable button to [Headphone +] or [Headphone -] (📖 107), you can press the button to adjust the headphone volume without using the menu.
- When you are monitoring the audio, you can choose to synchronize the audio signal with the video signal or monitor the audio in real time. Use the [♪)) Audio Setup] ❯ [Audio Output] ❯ [Monitor Delay] setting to select the method.

Downloaded From camera-usermanual.com Canon Manuals

Color Bars/Audio Reference Signal

You can have the camcorder generate and record color bars and a 1 kHz audio reference signal and output them from the HDMI OUT terminal, AV OUT terminal and 🎧 (headphone) terminal (audio reference signal only).

Operating modes: CAMERA MEDIA | AVCHD MP4

Recording Color Bars

The types of color bars available depend on the camcorder's system frequency setting. When [System Frequency] is set to [59.94 Hz], you can choose between SMPTE color bars and ARIB multi-format color bars. When [System Frequency] is set to [50.00 Hz], you can choose between EBU color bars and SMPTE color bars.

1 Open the color bars [Type] submenu.
[Camera Setup] ▶ [Color Bars] ▶ [Type]

2 Select the type of color bars and then press the joystick.

3 Open the [Enable] submenu to activate the color bars.
[Camera Setup] ▶ [Color Bars] ▶ [Enable]

4 Select [On] and then press the joystick.
- The selected color bars appear on the screen and will be recorded when you press the START/STOP button.
- Turning the camcorder off or changing the operating mode to MEDIA mode will deactivate the color bars.

[Camera Setup] > [Color Bars] > [Type] > [SMPTE] or [EBU]*

* Depending on the country/region of purchase.

[Camera Setup] > [Color Bars] > [Enable] > [Off]

NOTES

- When you want to display the color bars, set the custom picture file to [Off] (📖 111) or set the [Other Functions] ▶ [Over 100%] setting in the custom picture file to [Through] (📖 118).
- If you set an assignable button to [Color Bars] (📖 107), you can press the button to activate and deactivate the color bars.

Recording an Audio Reference Signal

The camcorder can output an audio reference signal.

1 Open the [1 kHz Tone] submenu.
[Audio Setup] ▶ [Audio Input] ▶ [1 kHz Tone]

2 Select the desired level and then press the joystick.
- Available levels are -12 dB, -18 dB and -20 dB.
- Select [Off] to turn off the signal.
- The signal is output at the selected level and will be recorded when you press the START/STOP button.

[Audio Setup] > [Audio Input] > [1 kHz Tone] > [Off]

Downloaded From camera-usermanual.com Canon Manuals

Video Scopes

The camcorder can display a simplified waveform monitor or vectorscope. It can also display an edge monitor to help you focus. The video scopes appear only on the OLED screen. They do not appear in the viewfinder or on an external monitor.

Displaying a Video Scope

Operating modes: CAMERA MEDIA | AVCHD MP4

Press the WFM button.

- The waveform monitor will appear in a window on the lower right of the screen.
- You can press the WFM button repeatedly to activate the video scopes in the following sequence.
  Waveform monitor → Vectorscope → Edge monitor → Off
- Alternatively, you can display the video scopes using [Other Functions] ◆ [WFM (OLED)] ◆ [Setting]. Select [WFM] for the waveform monitor, [VS] for the vectorscope or [Edge Mon.] for the edge monitor.

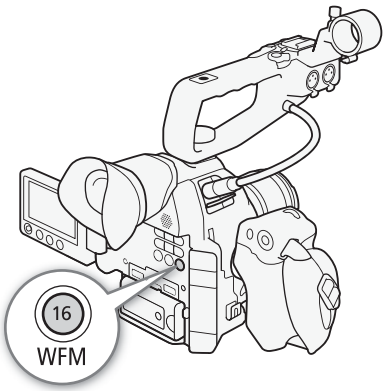

Configuring the Waveform Monitor

The camcorder's waveform monitor function offers 5 modes. You can also change the gain.

Operating modes: CAMERA MEDIA | AVCHD MP4

1 Open the waveform monitor [Type] submenu.
[Other Functions] ◆ [WFM (OLED)] ◆ [Waveform Monitor] ◆ [Type]

2 Select the desired option and then press the joystick.
- If you do not need to change the gain, you do not need to perform steps 3 and 4.

3 Open the waveform monitor [Gain] submenu.
[Other Functions] ◆ [WFM (OLED)] ◆ [Waveform Monitor] ◆ [Gain]

4 Select [1x] or [2x] and then press the joystick.

[Other Functions]
[WFM (OLED)]
[Waveform Monitor]
[Type]
[Line]

Options

[Line]:	Sets the waveform monitor to line display mode.
[Line+Spot]:	The waveform of the area in the red frame is displayed in red on top of the [Line] mode waveform.
[Field]:	Sets the waveform monitor to field display mode.
[RGB]:	Functions like an RGB parade scope.
[YPbPr]:	Functions like a YPbPr parade scope.

Downloaded From camera-usermanual.com Canon Manuals

Configuring the Vectorscope

[Other Functions] > [WFM (OLED)] > [Vectorscope] > [Type] > [Normal]

The camcorder's vectorscope function offers 2 modes. You can also change the gain.

Operating modes: CAMERA MEDIA | AVCHD MP4

1 Open the vectorscope [Type] submenu.
[Other Functions] ▶ [WFM (OLED)] ▶ [Vectorscope] ▶ [Type]

2 Select the desired option and then press the joystick.
- If you do not need to change the gain, you do not need to perform steps 3 and 4.

3 Open the vectorscope [Gain] submenu.
[Other Functions] ▶ [WFM (OLED)] ▶ [Vectorscope] ▶ [Gain]

4 Select [1x] or [5x] and then press the joystick.

Options

[Spot]: The color signal of the area in the red frame is displayed in red on top of the [Normal] mode waveform.

[Normal]: Displays the vectorscope.

Configuring the Edge Monitor

[Other Functions] > [WFM (OLED)] > [Edge Monitor] > [Type] > [Type 1]

The edge monitor looks at the focus of the entire picture and displays the results as a waveform, allowing you to focus with more precision. You can use the edge monitor along with the other focus assistance functions (72). The edge monitor features 2 modes.

Operating modes: CAMERA MEDIA | AVCHD MP4

1 Open the edge monitor [Type] submenu.
[Other Functions] ▶ [WFM (OLED)] ▶ [Edge Monitor] ▶ [Type]

2 Select the desired option and then press the joystick.
- If you do not need to change the gain, you do not need to perform steps 3 and 4.

3 Open the edge monitor [Gain] submenu.
[Other Functions] ▶ [WFM (OLED)] ▶ [Edge Monitor] ▶ [Gain]

4 Select the desired gain value and then press the joystick.

Options

[Type 1]: The waveform that represents the focus of the entire picture is displayed in green. In addition, the waveform of the area in the three red frames is displayed in red on top of the previous waveform.

[Type 2]: This mode displays the edge monitor with the waveform monitor in [Line+Spot] mode. The waveform monitor appears on the left in green while the edge monitor appears on the right in blue. The waveform of the area in the red frame is displayed in red on top of the edge monitor waveform.

Downloaded From camera-usermanual.com Canon Manuals

Reviewing a Recording

When the camcorder is in CAMERA mode, you can review the last clip that was recorded.

Operating modes: CAMERA MEDIA | AVCHD MP4

[Other Functions] > [Review Recording] > [Entire Clip]

1 Open the [Review Recording] submenu to set the review length.
[Other Functions] > [Review Recording]

2 Select the desired option and then press the joystick.

3 After you finish recording, press the button.

- The last clip that was recorded is played back without audio for the selected duration. [▶ REVIEW] appears at the top of the screen.
- Press the CANCEL button to stop reviewing the clip and change the camcorder back to record pause mode.
- After the clip finishes playing back, the camcorder returns to record pause mode.

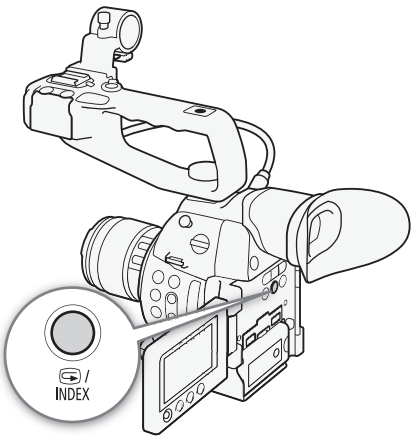

Options

[Entire Clip]: Allows you to review the entire clip.
[Last 4 sec]: Allows you to review just the last 4 seconds of the clip.

NOTES

- During a special recording mode, you cannot review a clip.
- If the camcorder switched SD cards during a recording, the camcorder will play back the clip on the SD card most recently recorded on.

Downloaded From camera-usermanual.com Canon Manuals

Selecting the File Numbering Method

MP4 clips and photos are automatically assigned consecutive numbers and stored on the SD card in folders. You can select the file numbering method to be used. We recommend using the [Continuous] setting.

[Other Functions] > [File Numbering] > [Continuous]

Operating modes: CAMERA MEDIA | AVCHD MP4

1 Open the [File Numbering] submenu.
[Other Functions] > [File Numbering]

2 Select the desired option and then press the joystick.

Options

[Reset]: File numbers will restart from 100-0001 every time you insert a new SD card. If an SD card already contains previous recordings, file numbers will continue from the number following that of the last file on the SD card.

[Continuous]: File numbers will continue from the number following that of the last MP4 clip or photo recorded with the camcorder. This setting is the most convenient for managing files on a computer.

Understanding folder names

- An example folder name is "101_1025". The first 3 digits indicate the folder number (from 100 to 999) and the last 4 digits indicate the month and day when the folder was created. In the example, the folder numbered 101 was created on October 25.

Understanding file numbers

- An example file number is "101-0107". The first 3 digits indicate the folder number the recording is stored in and the last 4 digits indicate the consecutive number assigned to the recording (from 0001 to 9999).
- The file number also indicates the name and location of the file on the SD card. For example, an MP4 clip/photo numbered 101-0107 that was recorded on October 25, is located in the “DCIM**101**_1025” folder as the file “MVI_**0107**.MP4” or “IMG_**0107**.JPG”.

NOTES

- Each folder can contain up to 500 recordings. When that number is exceeded, a new folder is created automatically.
- If you select [Continuous], you can reset the file numbering using the [Other Functions] > [Reset] > [All Settings] setting. However, this will also reset all of the camcorder's settings.

Downloaded From camera-usermanual.com Canon Manuals

Special Recording Modes

The camcorder features the following special recording modes.

Pre-recording: The camcorder will start recording approximately 3 seconds before you press the START/STOP button. This is especially useful when it is difficult to predict when to start recording.

Slow & fast motion recording: This mode allows you to change the shooting frame rate to achieve a slow motion or fast motion effect during playback.

Pre-recording Mode

When pre-recording mode is activated, the camcorder starts recording continuously into a temporary memory of approximately 3 seconds so when you press the START/STOP button, the clip will contain also approximately 3 seconds of video and audio recorded before you pressed the button.

Operating modes: CAMERA MEDIA | AVCHD MP4

1 Open the [Pre Rec] submenu.
[Other Functions] [Special Recording] [Pre-Recording]

2 Select [On] and then press the joystick.
- [PRE REC STBY] appears at the top of the screen.

3 Press the START/STOP button to begin recording.
- The rear and front tally lamps illuminate.
- [PRE REC STBY] changes to [● PRE REC] while recording.

4 Press the START/STOP button again to stop recording.
- The camcorder records the clip, including approximately 3 seconds of video and audio recorded before the START/STOP button was pressed.
- Both tally lamps will go out and [PRE REC STBY] appears at the top of the screen.

[Other Functions]
[Special Recording]
[Pre-Recording]
[Off]

NOTES
- During pre-recording mode, if the camcorder is left in record pause mode for approximately 1 hour, pre-recording will be deactivated automatically.
- Pre-recording mode cannot be used with deleting the last clip recorded, reviewing a recording, continuous recording or slow & fast recording mode.
- During pre-recording mode, the time code will be recorded with the running mode (80) set to [Free Run], regardless of the previous setting. When the time code is recorded, it will include the 3 seconds before the START/STOP button was pressed. When pre-recording mode is deactivated, the running mode will return to its previous setting.

Slow & Fast Motion Mode

When recording an MP4 clip, the camcorder can record with a frame rate (shooting frame rate) that is different from the playback frame rate. Recording a clip at a higher frame rate than the [Frame Rate] setting will result in a slow motion effect during playback. Conversely, a lower frame rate will result in a fast motion effect. Sound is not recorded in this special recording mode.

Operating modes: CAMERA MEDIA | AVCHD MP4

Downloaded From camera-usermanual.com Canon Manuals

Configuring Slow & Fast Motion Mode

[Other Functions] > [Special Recording] > [Slow & Fast Motion] > [Off]

1 Open the [Slow & Fast Motion] submenu.
[Other Functions] > [Special Recording] > [Slow & Fast Motion]

2 Select the desired shooting frame rate (for 59.94 Hz recordings) or [On] (for 50.00 Hz recordings) and then press the joystick.
- Available shooting frame rates depend on the video configuration.
- [S&F STBY] appears at the top of the screen.
- The selected shooting frame rate appears on the right of the screen next to the frame rate setting (the playback frame rate).
- Select [Off] instead to deactivate slow & fast recording mode.

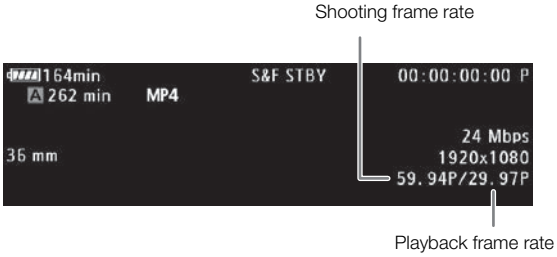

3 Press the START/STOP button to begin recording.
- The front and rear tally lamps illuminate.
- [S&F STBY] changes to [●S&F REC] while recording.

4 Press the START/STOP button again to stop recording.
- The clip is recorded at the selected frame rate.
- The tally lamps go out and [S&F STBY] appears at the top of the screen.

Available shooting frame rates

Video configuration			Shooting frame rate
System frequency	Bit rate*	Frame rate	
59.94 Hz	35 Mbps	59.94P	29.97P, 23.98P
	24 Mbps, 17 Mbps	29.97P	59.94P, 23.98P
		23.98P	59.94P, 29.97P
50.00 Hz	35 Mbps	50.00P	25.00P
	24 Mbps, 17 Mbps	25.00P	50.00P

* Slow & fast recording mode is not available when the bit rate is 4 Mbps or 3 Mbps.

NOTES
- Slow & fast recording mode cannot be used with relay recording, pre-recording, continuous recording or double slot recording. Taking photos is also not available.
- While recording, you cannot change the shooting frame rate.
- For lower shooting frame rates, it may take approximately 1 second to stop recording.
- Slow & fast recording mode will be deactivated if you change the video configuration.
- During this special recording mode, the time code's running mode (📖 80) will be set to [Rec Run] or [Regen.] and the time code advances by the number of frames recorded. If the time code's running mode is set to [Free Run], the running mode will switch to [Rec Run] during special recording mode. When slow & fast recording mode is deactivated, the running mode will return to its previous setting.

Downloaded From camera-usermanual.com Canon Manuals

Continuous Recording

Using continuous recording you can avoid missing important shooting opportunities. You need to activate the continuous recording mode using the menu. Once continuous recording has started, the camcorder will keep recording until you access the menu to stop recording. During continuous recording, the clip is recorded to both SD cards (double slot recording) so you can have an additional copy of your continuous recording.

Operating modes: CAMERA MEDIA | AVCHD MP4

During continuous recording, press the START/STOP button to set in and out points* in the recording. In MEDIA mode, you can display a special index screen of shots (📖 125) and play back and delete specific shots. The in and out point information can also be read by compatible NLE software** and used for editing.

* In points and out points are marks in the continuous recording clips that indicate the beginning and end point of important parts in the recording.

** For details about compatible software, visit your local Canon Web site.

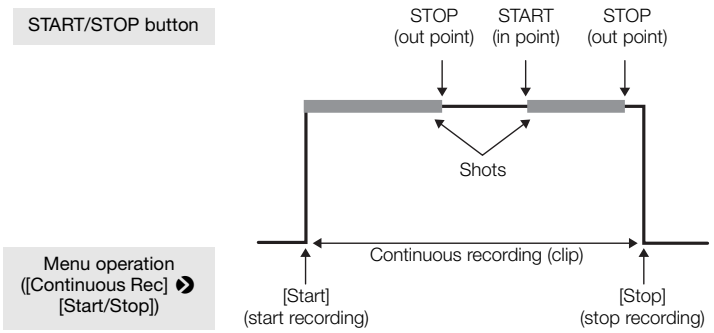

1 Open the continuous recording [Mode] submenu.

[🔧 Other Functions] ▶ [Continuous Rec] ▶ [Mode]

2 Select [On] and then press the joystick.

- [CONT STBY] appears at the top of the screen and the camcorder will enter continuous recording standby mode.
- The total shot recording time (CONT 00:00:00) will appear on the left of the screen.

3 Open the continuous recording [Start/Stop] submenu.

[🔧 Other Functions] ▶ [Continuous Rec] ▶ [Start/Stop]

4 Select [Start] and press the joystick.

- The rear and front tally lamps illuminate and continuous recording will start. [CONT] will be displayed in red and the time code will start running.
- At the same time, the first shot's in point is recorded. [STBY] changes to [● REC] and the total shot recording time will start advancing.
- Alternatively, you can press START/STOP to begin recording.

5 Press the START/STOP button as necessary to set additional in and out points.

- While recording: An out point is recorded, [● REC] changes to [STBY] and the total shot recording time will stop advancing.
- During standby mode: An in point is recorded, [STBY] changes to [● REC] and the total shot recording time will start advancing again.

[🔧 Other Functions] ▶ [Continuous Rec] ▶ [Mode] ▶ [Off]

[🔧 Other Functions] ▶ [Continuous Rec] ▶ [Start/Stop] ▶ [Start]

Downloaded From camera-usermanual.com Canon Manuals

6 To stop the continuous recording, open the continuous recording [Start/Stop] submenu.
[Other Functions] [Continuous Rec] [Start/Stop]

7 Select [Stop] and then press the joystick.
- Continuous recording will stop. Both tally lamps will go out and the clip will be recorded on the SD card(s).
- [CONT] will change back to white and the time code will stop.
- If a shot was being recorded while the menu was accessed, stopping the continuous recording will automatically record also an out point for that shot.

8 To end the continuous recording mode, open the continuous recording [Mode] submenu.
[Other Functions] [Continuous Rec] [Mode]

9 Select [Off] and then press the joystick.
- [CONT] and the total shot recording time display will disappear.

NOTES
- When using two SD cards for continuous recording, even if continuous recording is not possible on one SD card because the maximum number of clips (200 clips) has been reached, continuous recording may continue only on the other SD card as long as continuous recording clips can still be recorded on that SD card.
- Continuous recording cannot be used with relay recording, pre-recording, slow & fast motion recording, deleting the last clip recorded and reviewing a recording.
- Immediately after activating the continuous recording mode or stopping a continuous recording, the onscreen [CONT] display will flash momentarily. During this time, settings in the [Continuous Rec] submenu cannot be changed. Wait until the onscreen display stops flashing and stays on to change other settings.

Downloaded From camera-usermanual.com Canon Manuals

Using Accessories

This section covers some of the accessories for this camcorder.

Using the EF24-105mm f/4L IS USM and EF-S18-135mm f/3.5-5.6 IS STM Lenses

This section explains how to use the EF24-105mm f/4L IS USM and EF-S18-135mm f/3.5-5.6 IS STM lenses*, which are supplied separately in some lens kits sold in select regions. For details on attaching a lens, refer to *Attaching an EF Lens* (31). Illustrations in this section show the EF24-105mm f/4L IS USM lens unless stated otherwise.

* "IS" stands for Image Stabilizer. "USM" stands for Ultrasonic Motor. "STM" stands for Stepping Motor.

Operating modes: CAMERA MEDIA | AVCHD MP4

EF24-105mm f/4L IS USM lens features

- Image stabilizer
- Aspheric and super UD lens elements for excellent imaging performance.
- Ultrasonic motor (USM) for quick and quiet autofocusing.
- Manual focusing is available after the subject comes into focus in autofocus mode.
- Circular aperture for nicer background blur.
- Tight seal structure ensures excellent dust-proof and drip-proof performance.*

* The tight seal structure does not make the lens completely dust-proof and drip-proof.

EF-S18-135mm f/3.5-5.6 IS STM lens features

- Image stabilizer
- Aspheric and UD lens elements for outstanding image delineation.
- Electronic manual focusing through the electronic detection of the focus ring's rotation.
- Manual focusing is available after the subject comes into focus in autofocus mode.
- Circular aperture for nicer background blur.
- Dynamic IS, which stabilizes the shot while shooting and walking, and the stepping motor, which allows for quiet and smooth movie servo AF.

Attaching the Lens Hood

When the EW-83H hood (supplied with the EF24-105mm f/4L IS USM lens) or EW-73B hood (optional accessory for the EF-S18-135mm f/3.5-5.6 IS STM lens) is attached to the lens, it blocks stray light and protects the front of the lens from snow, rain, dust, etc. Before storing the lens in a bag, you can attach the hood in reverse.

1 Align the red dots on the hood and lens edges.

2 Turn the hood as shown in the illustration.

- Turn the lens hood clockwise until it attaches securely.

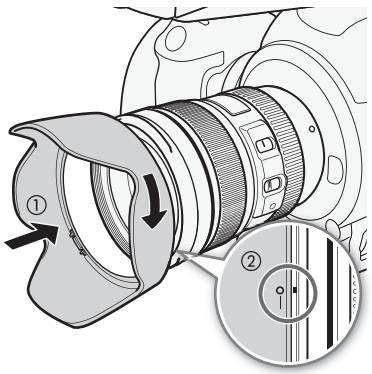

IMPORTANT

- When attaching or detaching the lens hood, grasp the base of the hood when turning it. Grasping the hood's edges when turning it may deform the hood.

NOTES

- If the hood is not properly attached, it may obstruct the image's periphery, making it look dark.

Downloaded From camera-usermanual.com Canon Manuals

Zooming

To zoom, turn the lens's zoom ring.

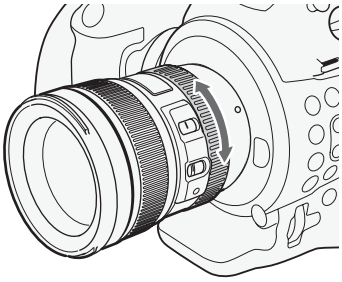

NOTES

- If you want to zoom, do so before focusing. Turning the zoom ring after achieving focus may throw off the focus slightly.
- With the EF-S18-135mm f/3.5-5.6 IS STM lens, blurring may occur temporarily if the zoom ring is turned too quickly.

Locking the Zoom Ring (EF-S18-135mm f/3.5-5.6 IS STM Lens Only)

The zoom ring can be locked to keep the lens at the shortest point. This can be convenient when you want to prevent the lens from extending while carrying the camcorder on a strap.

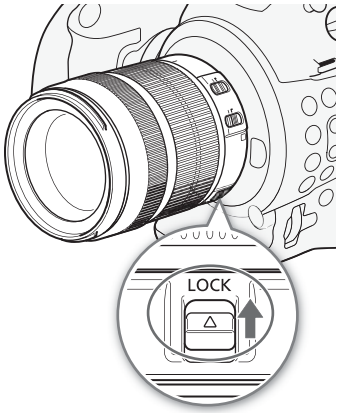

1 Turn the zoom ring to the wide-angle end (18 mm).
   - The zoom ring can be locked only at the wide-angle end.
2 Slide the zoom ring lock lever in the direction indicated by the arrow.
   - To release the zoom ring, slide the zoom ring lock lever in the opposite direction.

Using the Image Stabilizer

When you use the IS lens's built-in image stabilizer, camcorder shake is compensated to achieve steadier shots. The procedure explained here is based on the EF24-105mm f/4L IS USM lens as an example. The image stabilizer is available regardless of the focus mode switch's position.

Set the STABILIZER switch to ON.

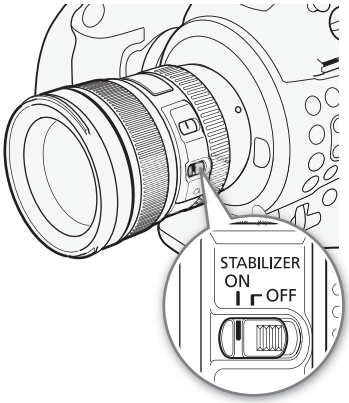

IMPORTANT

- The image stabilizer operates for about two seconds even after recording has finished. Do not remove the lens while the stabilizer is in operation. This will cause a malfunction.

NOTES

- The EF24-105mm f/4L IS USM and EF-S18-135mm f/3.5-5.6 IS STM lenses are effective for hand-held shots under the following conditions.
  - In semi-dark areas such as outdoors at night or indoors.
  - In situations where your footing is uncertain.
- The image stabilizer cannot compensate for a blurred shot caused by a subject that moved.
- The dynamic IS of the EF-S18-135mm f/3.5-5.6 IS STM lens is effective when shooting while walking and is most effective at the wide-angle end. When the image stabilizer is active, dynamic IS will automatically activate when the camcorder shoots clips.
- If the degree of camcorder shake is too high, the image stabilizer may not be able to fully compensate.
- With the EF-S18-135mm f/3.5-5.6 IS STM lens, image stabilization compensates for camcorder shake in all directions when shooting a still subject. It compensates for vertical shake during panning shots and for horizontal shake during tilting shots.

Downloaded From camera-usermanual.com Canon Manuals

- When you use a tripod, the image stabilizer should be turned off to save battery power.
- The image stabilizer function activates when the lens is used with an Extension Tube EF12 II or EF25 II.

Using the Infinity Compensation Mark (EF24-105mm f/4L IS USM Lens Only)

You can compensate for shifting of the infinity focus point that results from changes in temperature. The infinity position at normal temperature is the point at which the vertical line of the L mark is aligned with the distance indicator on the distance scale.

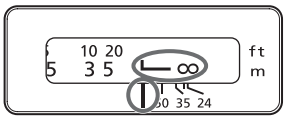

NOTES

- For accurate focusing on subjects at infinity distance, focus manually.

Using an Optional Filter

You can attach a filter to the filter mounting thread on the front of the lens.

NOTES

- Only one filter can be attached at a time.
- If you need a polarizing filter, use the optional Circular Polarizing Filter (77 mm) for the EF24-105mm f/4L IS USM lens or optional Circular Polarizing Filter PL-C B (67 mm) for the EF-S18-135mm f/3.5-5.6 IS STM lens.
- To adjust the polarizing filter, first remove the lens hood.

Using an Optional Extension Tube

You can attach the optional Extension Tube EF12 II or EF25 II for magnified shots. The shooting distance and magnification are shown below.

For the EF24-105mm f/4L IS USM lens

Extension tube	Focal length	Focusing distance range (in mm)		Magnification	
		Near	Far	Near	Far
EF12 II	24 mm	177	187	0.60x	0.50x
	105 mm	326	1022	0.40x	0.12x
EF25 II	24 mm	Incompatible			
	105 mm	280	574	0.61x	0.27x

For the EF-S18-135mm f/3.5-5.6 IS STM lens

Extension tube	Focal length	Focusing distance range (in mm)		Magnification	
		Near	Far	Near	Far
EF12 II	18 mm	Incompatible			
	135 mm	300	1568	0.43x	0.09x
EF25 II	18 mm	Incompatible			
	135 mm	258	822	0.61x	0.21x

Using an Optional Close-up Lens (EF24-105mm f/4L IS USM Lens Only)

You can attach an optional 500D (77 mm) Close-up Lens to enable close-up shooting at a magnification of 0.34x to 0.05x.

NOTES

- For accurate focusing on subjects, we recommend that you focus manually.

Downloaded From camera-usermanual.com Canon Manuals

- The optional 250D Close-up Lens cannot be attached.

Shooting Precautions (EF-S18-135mm f/3.5-5.6 IS STM Lens Only)

The EF-S18-135mm f/3.5-5.6 IS STM utilizes a stepping motor that drives the focus lens. The motor also controls the focus lens during zooming.

When the camcorder is turned off

The motor does not operate while the camcorder is turned off. Therefore, be aware of the following points.

- Manual focus adjustments are not possible.
- During zooming, delayed focus will occur.

When the camcorder is turned on

When the camcorder is turned on, the lens performs an initial reset.

- During the initial reset, the image on the screen may appear out of focus but this is not a malfunction.
- The initial reset takes approximately 1 second (time may vary). You can start shooting after the initial reset has finished.

Using the Optional GP-E2 GPS Receiver

When the optional GP-E2 GPS Receiver is connected to the camcorder, the camcorder will automatically record the GPS information—longitude, latitude and altitude, and the UTC (coordinated universal time) date and time. In MEDIA mode, you can check whether a recording contains GPS information or not.

Connecting the GPS Receiver

Turn off the camcorder and the receiver. Connect the receiver to the camcorder's USB terminal using the USB cable*. While recording, place the receiver in the carrying case* and attach it to the camcorder's grip belt or carry it on your person. For details about connecting and using the receiver, refer to the GP-E2 Instruction Manual.

* Supplied with the optional GP-E2 GPS Receiver.

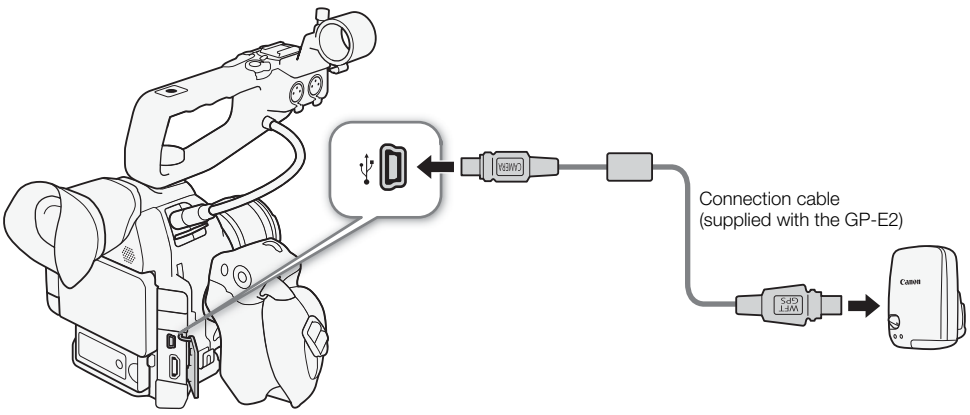

Downloaded From camera-usermanual.com Canon Manuals

Activating the GPS Receiver

Operating modes: CAMERA MEDIA | AVCHD MP4

Turn on the camcorder and receiver.

- The icon appears on the right of the screen and will blink as the receiver tries to acquire satellite signals.
- When satellite signals are correctly acquired, the icon will stay continuously on. GPS functions will be activated and clips and photos recorded thereafter will be geotagged.

Adjusting the Date/Time Automatically According to GPS Position

Setting [Other Functions] [GPS Auto Time] to [On], you can have the camcorder automatically adjust its date and time settings according to the information received from the GPS signal while an optional GP-E2 GPS Receiver is connected to the camcorder.

Operating modes: CAMERA MEDIA | AVCHD MP4

NOTES

- When [Other Functions] [GPS Auto Time] is set to [On], [Other Functions] [Time Zone] and settings in the [Other Functions] [Set Clock] submenu will not be available.
- While the Browser Remote application is in use, the automatic adjustment of the date/time will be deactivated.

Displaying GPS Information

You can display GPS information for clips and photos. The GPS information is based on the recording start time for clips and the in point for shots.

Operating modes: CAMERA MEDIA | AVCHD MP4

1 Select the desired clip or photo and then press the joystick to open the clip or photo menu.

2 Select [GPS Information] and then press the joystick.

- The GPS information of the clip or photo will be displayed.

IMPORTANT

- In certain countries/regions, the use of GPS may be restricted. Be sure to use the GPS receiver in accordance with local laws and regulations of the country/region where the receiver is used. Be particularly careful when traveling outside of your home country.
- Be careful about using the GPS receiver in places where the use of electronic devices is restricted.
- The GPS information recorded with clips and photos may contain data that can lead others to locate or identify you. Be careful when sharing geotagged recordings with others or when uploading them to the Web.
- Do not leave the GPS receiver near strong electromagnetic fields such as near powerful magnets and motors.

NOTES

- On the [GPS Information Display] status screen (184), you can check the current GPS information and satellite signal strength.
- GPS signal reception may take some time after replacing the battery pack or when first turning on the camcorder after a long period without use.
- The camcorder is not compatible with the GPS receiver's digital compass and positioning interval functions. Also, the [Set now] option is not available for the [Other Functions] [GPS Auto Time] setting.
- GPS information will not be recorded with photos captured from a clip.

Downloaded From camera-usermanual.com Canon Manuals

Using the Optional RC-V100 Remote Controller

You can connect the optional RC-V100 Remote Controller to control the camcorder (including advanced recording functions) from a distance. In addition to turning the camcorder on and off and navigating the menus, while recording you can control various camera functions, such as aperture and shutter speed, and custom picture settings, like knee and sharpness.
The connection cable supplied with the RC-V100 is required to connect the remote controller to the camcorder's REMOTE terminal. For details on how to connect and use the remote controller, refer to its instruction manual.

Operating modes: CAMERA MEDIA | AVCHD MP4

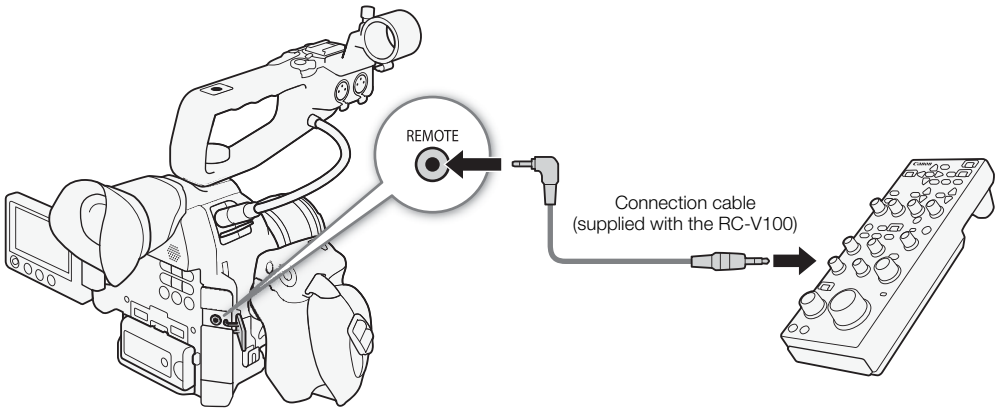

1 Turn off the camcorder and connect the optional RC-V100 Remote Controller to the camcorder.

2 Turn on the camcorder in CAMERA mode and open the [REMOTE Term.] submenu.
[Other Functions] ❯ [REMOTE Term.]

3 Select [RC-V100] and then press the joystick.

[Other Functions]
[REMOTE Term.]
[Standard]

Options

[RC-V100]: Select this option to use the optional RC-V100 Remote Controller.
[Standard]: Select this option to use commercially available remote controls.

NOTES

- The following controls on the remote controller will not operate the camcorder: ND button, AGC button, AUTO KNEE button, ZOOM dial and AF button.
- The AUTO IRIS button on the remote controller will operate the camcorder only when a compatible EF lens (📖 65) is attached to the camcorder.
- Custom picture settings can be changed using the remote controller only when an appropriate custom picture file is selected (📖 111).

Downloaded From camera-usermanual.com Canon Manuals

Downloaded From camera-usermanual.com Canon Manuals

Assignable Buttons

The camcorder conveniently features 17* buttons to which you can assign various functions. By assigning often-used functions, you can quickly access them with a single press of a button.

* In MEDIA mode, only assignable buttons 7 to 17 are available.

Operating modes: CAMERA MEDIA | AVCHD MP4

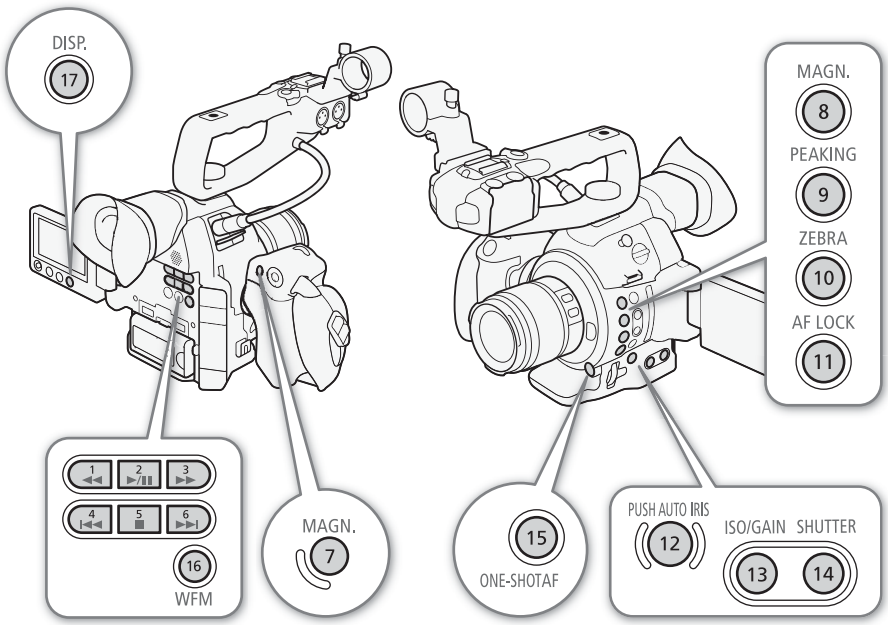

(on the grip unit)

Changing the Assigned Function

1 Open the [Assignable Buttons] submenu.

[Other Functions] [Assignable Buttons]

2 Select the button to change and then press the joystick.

- A list of available functions appears.
- The quick reference shows the default settings for each assignable button. The labels on the camcorder/grip unit for assignable buttons 7 to 17 also indicate their default settings. By default, buttons 1 to 6 have no assignable function set.

3 Select the desired function and then press the joystick.

- If you selected [User Setting (NONE)], the menu will change from orange to blue to indicate you are selecting a menu setting to register. Continue the procedure to register a menu setting. Otherwise, you do not need to perform the rest of the procedure.

[Other Functions]

[Assignable Buttons]

[1 to 6 (NONE)]
[7 MAGN.]
[8 MAGN.]
[9 PEAKING]
[10 ZEBRA]
[11 AF LOCK]
[12 PUSH AUTO IRIS]
[13 ISO/GAIN]
[14 SHUTTER]
[15 ONE-SHOT AF]
[16 WFM]
[17 DISP.]

Downloaded From camera-usermanual.com Canon Manuals

4 Navigate the menus to find the menu setting you want to register and then press the joystick.

- The selected menu setting will be registered to the customizable slot and to the assignable button.
- The name of the selected menu setting will be listed instead of [User Setting (NONE)] and the customizable slot will be marked by a ★.

NOTES

- You can check the two [Assignable Buttons] status screens (📖 177) to see what functions are set for the assignable buttons.
- You can reset only the functions assigned to the assignable buttons, without affecting other camera settings, with the [Other Functions] ❯ [Reset] ❯ [Assignable Buttons] function. All the assignable buttons will return to their default function.

Using an Assignable Button

After you assign a function to one of the buttons, press the button to activate the function. For some functions, an options menu may appear. In such case, select the desired option and then press the joystick.

Assignable Functions

Functions can be set separately in CAMERA mode and MEDIA mode. Refer to the following table for assignable functions and available modes.

Function name	Description	CAMERA	MEDIA	📖
[ONE-SHOT AF]	The camcorder focuses automatically one time only (One-shot AF function).	●	–	74
[AF LOCK]	Locks the focus when using continuous AF and face AF.	●	–	75
[Face AF]	Activates the autofocus mode in the following sequence: Face priority → Face only → Off	●	–	76
[PUSH AUTO IRIS]	The camcorder automatically adjusts the aperture (f/stop).	●	–	65
[Iris Mode]	Switches the aperture mode.	●	–	63
[Iris +]	Opens up the aperture.	●	–	63
[Iris -]	Closes the aperture.	●	–	
[AE Shift +]	Compensates the exposure toward the bright side.	●	–	66
[AE Shift -]	Compensates the exposure toward the dark side.	●	–	
[Backlight]	Turns the [Backlight] light metering option on/off.	●	–	67
[Spotlight]	Turns the [Spotlight] light metering option on/off.	●	–	
[ISO/GAIN]	Highlights the ISO speed or gain value so it can be adjusted.	●	–	60
[SHUTTER]	Highlights the shutter speed so it can be adjusted.	●	–	57
[View Assist.]	Turns view assistance on/off.	●	–	53
[HDMI LUT]	Applies a LUT to the video signal output from the HDMI OUT terminal.	●	–	138
[PEAKING]	Turns peaking on/off.	●	–	72
[ZEBRA]	Turns zebra patterns on/off.	●	–	79
[WFM]	Activates video scopes in the following sequence: Waveform monitor → Vectorscope → Edge monitor (CAMERA mode only) → Off	●	●	92
[MAGN.]	Turns magnification on/off.	●	–	73
[DISP.]	Switches the onscreen displays.	●	●	52
[Color Bars]	Turns color bars on/off.	●	–	91
[Markers]	Turns onscreen markers on/off.	●	–	78
[OLED Setup]	Opens the [OLED Setup] submenu.	●	●	37
[Viewfinder Setup]	Opens the [Viewfinder Setup] submenu.	●	●	
[OLED/VF B&W]	Turns the B&W mode of the OLED screen and viewfinder on/off.	●	●	37

Downloaded From camera-usermanual.com Canon Manuals

Function name	Description	CAMERA	MEDIA	🕮
[Onscreen Display]	Turns on/off the inclusion of onscreen displays on video output from the camcorder's terminals (both HD and SD video output).	●	●	139
[Time Code]	Displays the [Time Code] submenu.	●	–	80
[Time Code Hold]*	Puts the time code display on hold or resumes it.	●	●	81
[Headphone +]	Increases the headphone volume.	●	●	129
[Headphone -]	Reduces the headphone volume.	●	●	
[Speaker +]	Increases the built-in speaker's volume.	–	●	129
[Speaker -]	Reduces the built-in speaker's volume.	–	●	
[Monitor Channels]	Switches the audio output channel.	●	●	141
[Audio Level]	Turns the audio level meter on/off.	●	●	85, 89
[Photo]*	Records a photo.	●	●	163
[My Menu]	Opens the [My Menu] customized submenu.	●	–	29
[Initialize Media]	Opens the [Initialize Media] submenu.	●	●	42
[Up]	Replaces the joystick's up arrow.	●	●**	28
[Down]	Replaces the joystick's down arrow.	●	●**	
[Left]	Replaces the joystick's left arrow.	●	●**	
[Right]	Replaces the joystick's right arrow.	●	●**	
[SET]	Replaces the joystick's SET button. That is, pressing the assignable button is the same as pressing down the joystick itself.	●	●**	
[STATUS]*	Displays the status screens.	●	●	176
[WB SET]	Allows you to adjust the white balance with the joystick when using the preset white balance and color temperature settings.	●	–	69
[WB]	Allows you to change the white balance mode.	●	–	68
[CUSTOM PICTURE]	Displays the custom picture menu.	●	–	110
[User Setting (NONE)]*	Customizable slot. Assign any menu setting you would like to register.	●	●	–

* Function can be used only by assigning it to a button.
**Not available for photos.

Downloaded From camera-usermanual.com Canon Manuals

Custom Picture Settings

You can preset a number of picture-related settings (📖 114). After adjusting the desired settings to your preference, you can save the whole set in the camcorder or SD card as a custom picture file. You can then load the file at a later date to change the current settings to the preset levels you selected. You can even embed the custom picture settings in photos recorded to an SD card.

Operating modes: CAMERA MEDIA | AVCHD MP4

Several custom picture settings by category

Category	Setting	Menu item	📖
Settings related to light and dark tones	Gamma	[Gamma]	114
	Black gamma	[Black Gamma]	115
	Master pedestal	[Black] ▶ [Master Pedestal]	115
	Master black	[Black] ▶ [Master Black]	115
	Knee	[Knee]	116
	Adjust black level	[Other Functions] ▶ [Setup Level]	118
	Video signal over 100%	[Other Functions] ▶ [Over 100%]	118
Settings related to sharpness and noise	Sharpness level	[Sharpness] ▶ [Level]	116
	Sharpness limit	[Sharpness] ▶ [Limit]	116
	Knee aperture	[Sharpness] ▶ [Knee Aperture]	117
	Sharpness applied to dark areas	[Sharpness] ▶ [Level Depend]	117
	Coring	[Sharpness] ▶ [Coring]	116
	Noise reduction	[Noise Reduction]	117
	Skin detail	[Skin Detail]	117
	Selective noise reduction	[Selective NR]	117
Settings related to color	Saturation in dark areas	[Low Key Saturation]	115
	Saturation in highlights	[Knee] ▶ [Saturation]	116
	Color matrix	[Color Matrix]	117
	White balance	[White Balance]	118
	Color correction	[Color Correction]	118

ⓘ NOTES

- Custom picture files created with this camcorder are compatible only with other C100 Mark II camcorders.
- You can save up to 9 different custom picture files on the camcorder and up to 20 custom picture files on each SD card. Custom picture files can be copied between the camcorder and SD card.

Downloaded From camera-usermanual.com Canon Manuals

Selecting Custom Picture Files

Select a custom picture file to apply its settings to your recordings or to edit, rename, protect, or transfer it. When [Camera Setup] > [CP CINEMA Locked] is set to [On], the custom picture menu cannot be accessed and custom picture files cannot be used.

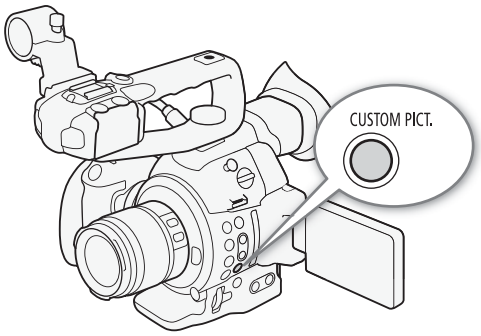

1 Press the CUSTOM PICT. button.

- The custom picture menu appears. The currently selected file appears next to the SET icon or [Off] if no file is selected.
- When an optional RC-V100 Remote Controller is connected to the camcorder, you can also press the remote controller's CUSTOM PICT. button to open the custom picture submenu.

2 Select [SET CP Select File] and then press the joystick.

- The default custom picture file is [Off]. A list of custom picture files in the camcorder and SD card appears. Files in the camcorder begin with [C1] to [C9]; those on SD card A begin with [A1] to [A20] and those on SD card B begin with [B1] to [B20].

3 Select the desired file and then press the joystick.

- Select [Camera] for a file in the camcorder or [SD A] or [SD B] for a file in the respective SD card.
- Select [Off] to record without applying any custom picture settings.
- To apply the custom picture settings of the selected file, continue to step 4. To perform other operations on the selected file (edit settings, copy, protect, etc.), continue instead with the one of the procedures in the following pages.

4 Press the CUSTOM PICT. button to exit the menu.

- The selected custom picture file's settings will be applied. CP (camcorder) or CP (SD card) and the custom picture file's number will appear on the left of the screen.

Preset Custom Picture Files

By default, the custom picture files in the camcorder in file slots [C7] to [C9] are protected. Remove the protection (112) to edit the file. The following describes when to use the preset files.

[C7: EOS Std.]: Reproduces the image quality and look (vivid, sharp and crisp) of an EOS digital SLR camera with its picture style set to [Standard].

[C8: Wide DR]: Applies a gamma curve with a very wide dynamic range and an appropriate color matrix that nevertheless do not require post-production processing.

[C9: CINEMA]: Uses the Canon Log gamma and color matrix for an outstanding dynamic range and an image suitable for processing in post-production.

NOTES

- **About changing custom picture related settings using the optional RC-V100 Remote Controller**
  - If a protected custom picture file or no custom picture file is selected on the camcorder ([SET CP Select File] is set to [Off]) custom picture related settings cannot be changed using the remote controller.
  - While the remote controller is connected to the camcorder, custom picture files on an SD card cannot be used. If you connect the remote controller while a custom picture file on an SD card was selected, the custom picture file will change automatically to [Off] (recording without custom picture settings). To use the settings of a custom picture file saved on an SD card, copy the file in advance from the SD card to an open file slot in the camcorder (113).
  - Adjusting custom picture related settings using the remote controller will change the settings registered under the currently selected custom picture file. If you want to keep an important custom picture file, copy it in advance to an SD card or select in advance a custom picture file you do not mind changing.

Downloaded From camera-usermanual.com Canon Manuals

Editing a Custom Picture File's Settings

This procedure describes how to change the custom picture settings in detail when you want maximum control over the image. In addition, the camcorder offers an easier, more intuitive way to adjust only the gamma curve and white balance settings using a simplified graphical interface (📖 120).

1 After selecting a file, select [FINE CP Fine Tuning] and then press the joystick.

2 Select a setting and then press the joystick.

3 Change the setting to the desired level and then press the joystick.

- Refer to *Available Custom Picture Settings* (📖 114) for details on the various settings.
- Repeat steps 2 and 3 for other settings, as necessary.

4 Press the CUSTOM PICT. button to exit the custom picture menu and apply the new custom picture settings.

Resetting the Current File's Settings to Default Values

[FINE CP Fine Tuning]

[Reset]

1 After selecting a file, open the [Reset] submenu.

[FINE CP Fine Tuning] ❯ [Reset]

2 Select the desired default values and then press the joystick.

- Select [NEUTRAL] to reset to neutral default values (equivalent to not using custom picture settings at all) or one of the preset settings ([CINEMA], [Wide DR] or [EOS Std.]) if you want to replicate these preset settings, for example as a starting point to edit them further.

3 Select [OK] and then press the joystick.

Renaming Custom Picture Files

[FINE CP Fine Tuning]

[Rename]

1 After selecting a file, open the [Rename] submenu.

[FINE CP Fine Tuning] ❯ [Rename]

- A screen appears that displays the current file name with an orange selection frame on the first character.

2 Push the joystick up/down to select an alphanumeric character or symbol and then press the joystick to move to the next field.

- Change the rest of the name in the same way.

3 Select [Set] and then press the joystick.

4 Press the CUSTOM PICT. button to exit the custom picture menu and apply the selected custom picture settings.

Protecting Custom Picture Files

[FINE CP Fine Tuning]

[Protect]

Protecting a custom picture file prevents its settings from being accidentally changed.

1 After selecting a file, open the [Protect] submenu.

[FINE CP Fine Tuning] ❯ [Protect]

2 Select [Protect] and then press the joystick.

- In the custom picture menu, 🔑 will appear next to the file name.
- To remove protection settings, select [Unprotect] instead.

Downloaded From camera-usermanual.com Canon Manuals

3 Press the CUSTOM PICT. button to exit the custom picture menu and apply the selected custom picture settings.

Transferring Custom Picture Files

You can transfer custom picture files between the camcorder and SD cards. When the custom picture file is in the camcorder, use [Copy To SD] or [Load From SD] depending on the operation you wish to perform. Similarly, when the custom picture file is on an SD card, use [Copy To Cam.] or [Load From Cam]. Custom picture files cannot be copied directly from one SD card to another.

Copying a File from the Camcorder to an SD Card

[CP Transfer File]

[Copy To SD]

1 After selecting a file in the camcorder, open the [Copy To SD] submenu.
[CP Transfer File] ❯ [Copy To SD]

2 Select [SDA] or [SDB] and then press the joystick.

3 Select the file slot on the SD card under which to save the file and then press the joystick.
- If there are available slots, you can select [New File] to save the file in the first available slot.

4 Select [OK] and then press the joystick.
- The currently selected file will be copied to the selected slot on the SD card, overwriting the file in that slot. When the confirmation screen appears, press the joystick.

5 Press the CUSTOM PICT. button to exit the custom picture menu and apply the selected custom picture settings.

Replacing a File in the Camcorder with a File on an SD Card

[CP Transfer File]

[Load From SD]

1 After selecting a file in the camcorder to replace, open the [Load From SD] submenu.
[CP Transfer File] ❯ [Load From SD]

2 Select [SDA] or [SDB] and then press the joystick.

3 Select the file to transfer to the camcorder and then press the joystick.

4 Select [OK] and then press the joystick.
- The file in the camcorder will be overwritten by the one on the SD card. When the confirmation screen appears, press the joystick.

5 Press the CUSTOM PICT. button to exit the custom picture menu and apply the selected custom picture settings.

Copying a File from an SD Card to the Camcorder

[CP Transfer File]

[Copy To Cam.]

1 After selecting a file on an SD card, open the [Copy To Cam.] submenu.
[CP Transfer File] ❯ [Copy To Cam.]

2 Select the file slot under which to save the file and then press the joystick.

3 Select [OK] and then press the joystick.
- The currently selected file will be copied to the selected slot on the camcorder, overwriting the file in that slot. When the confirmation screen appears, press the joystick.

4 Press the CUSTOM PICT. button to exit the custom picture menu and apply the selected custom picture settings.

Downloaded From camera-usermanual.com Canon Manuals

Replacing a File on an SD Card with a File in the Camcorder

[Transfer File] > [Load From Cam.]

1 After selecting a file on an SD card to replace, open the [Load From Cam.] submenu.
[Transfer File] > [Load From Cam.]

2 Select the file to transfer to the SD card and then press the joystick.

3 Select [OK] and then press the joystick.
- The file on the SD card will be overwritten by the one in the camcorder. When the confirmation screen appears, press the joystick.

4 Press the CUSTOM PICT. button to exit the custom picture menu and apply the selected custom picture settings.

Embedding Custom Picture Settings in a Recording

[Other Functions] > [Photos] > [Add File] > [On]

You can take a photo with your custom picture settings applied to it. Later, you can copy those embedded settings to the camcorder to apply to future recordings (📖 167). You may find that embedding custom picture settings in a recording helps you keep track of them, such as verifying what settings were used for a particular recording.

1 Open the [Add File] submenu.
[Other Functions] > [Photos] > [Add File]

2 Select [On] or [Off] and then press the joystick.

Available Custom Picture Settings

The following are the available settings. Even if no custom picture file is selected, the default settings are still applied to the picture.

[Gamma]

The gamma curve changes the overall look of the image. (Default: [Normal 1]).

[Normal 1] to [Normal 4]: These settings are suitable for viewing the image on a TV monitor. Highlights in [Normal 2] are brighter than those of [Normal 1]. Dark tones in the lower part of the gamma curve for [Normal 3] (ITU-R BT.709 standard) and [Normal 4] are more pronounced than those of [Normal 2].

[Cine 1] or [Cine 2]: Use [Cine 1] for a gamma curve that results in a picture with a cinema-like feel and cinema-like tones. [Cine 2] has softer contrasts than does [Cine 1] but is also suitable for creating a cinema-like picture.

[EOS Std.]: This gamma curve approximates the look of an EOS digital SLR camera when the picture style is set to [Standard] (high contrast, vibrant colors).

[Wide DR]: Applies a gamma curve with a very wide dynamic range, optimized for playback on a TV monitor.

[Canon Log]: Applies a logarithmic gamma curve for outstanding dynamic range. Requires image processing in post-production.

Downloaded From camera-usermanual.com Canon Manuals

Gamma

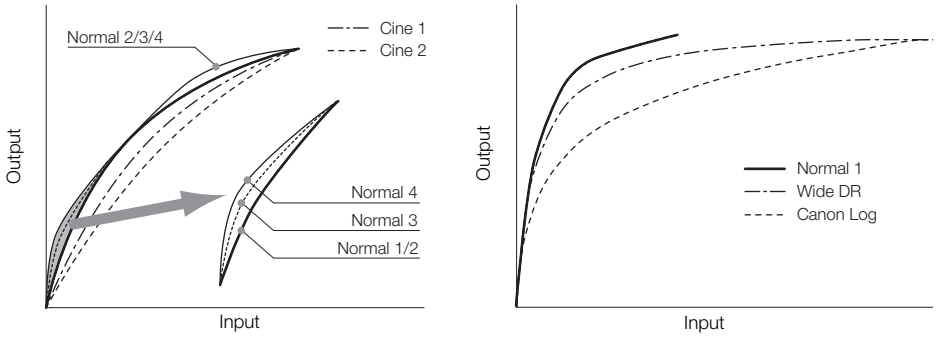

[Black]

Controls the black level and color cast of blacks.

[Master Pedestal]

The master pedestal increases or decreases the black level. Higher settings will make dark areas brighter but decrease contrast. This setting can be adjusted from -50 to 50. (Default: ±0)

[Master Black]

Corrects color cast in blacks.

[Red]: -50 to 50 (Default: ±0)

[Green]: -50 to 50 (Default: ±0)

[Blue]: -50 to 50 (Default: ±0)

[Black Gamma]

Controls the lower part of the gamma curve (dark areas of the image). When [Gamma] is set to [Wide DR] or [Canon Log], this setting has no effect on the picture.

[Level]: Raises or lowers the lower part of the gamma curve. This setting can be adjusted from -50 to 50. (Default: ±0)

[Range]: Selects the range in which dark areas are affected. This setting can be adjusted from -20 to 50. (Default: ±0)

[Point]: Determines the shape of the lower part of the gamma curve. This setting can be adjusted from -20 to 50. (Default: ±0)

Black Gamma

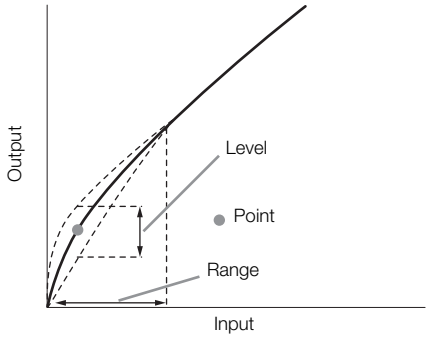

[Low Key Satur.]

Adjusts color saturation in dark areas.

[Enable]: Activates/deactivates the setting. (Default: [Off])

Downloaded From camera-usermanual.com Canon Manuals

[Level]: Specifies how saturated colors are in dark areas. This setting can be adjusted from -50 to 50. (Default: ±0)

[Knee]

Controls the upper part of the gamma curve (highlights of the image). By compressing the highlights, you can prevent parts of the image from being overexposed. When [Gamma] is set to [Cine 1], [Cine 2], [EOS Std.], [Wide DR] or [Canon Log], this setting has no effect on the picture.

[Enable]: Activates/deactivates the setting. (Default: [On])

[Slope]: Determines the slope of the gamma curve above the knee point. This setting can be adjusted from -35 to 50. (Default: ±0)

[Point]: Sets the knee point of the gamma curve. This setting can be adjusted from 50 to 109. (Default: 95)

[Saturation]: Adjusts color saturation in highlights. This setting can be adjusted from -10 to 10. (Default: ±0)

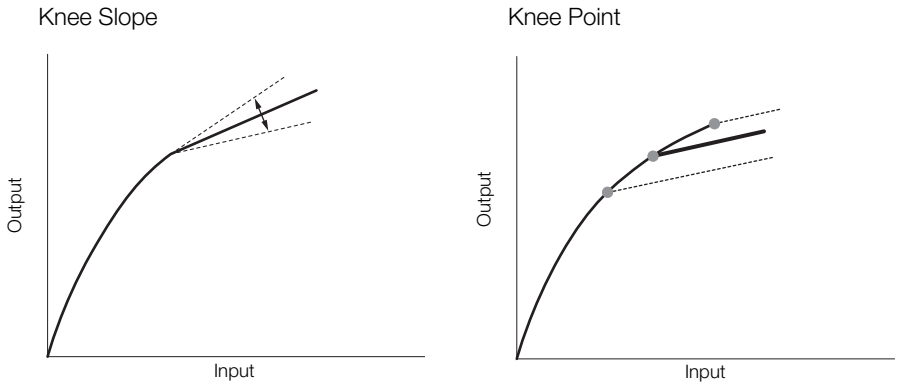

[Sharpness]

Sets the sharpness of the output and recording signal.

[Level]: Sets the sharpness level. This setting can be adjusted from -10 to 50. (Default: ±0)

[H Detail Freq.]: Sets the center frequency of horizontal sharpness. Setting higher values increases the frequency, which, in turn, increases the sharpness. This setting can be adjusted from -8 to 8. (Default: ±0)

[Coring]: Reduces noise artifacts caused by high sharpness levels.

[Level]: Sets the coring level. Higher values prevent sharpness from being applied to minute details, resulting in less noise. This setting can be adjusted from -30 to 50. (Default: ±0)

[D-Ofst]: You can use [D-Ofst] and [D-Curve] to adjust the coring level based on brightness. [D-Ofst] sets the coring level of the minimum brightness level. This setting can be adjusted from 0 to 50. (Default: 0)

[D-Curve]: Sets the curve of the coring adjustment. This curve is the change from [Level] to [D-Ofst]. This setting can be adjusted from 0 to 8. (Default: 0)

[HV Detail Bal.]: Adjusts the ratio between horizontal and vertical detail. Higher values emphasize vertical detail while lower values emphasize horizontal detail. This setting can be adjusted from -8 to 8. (Default: ±0)

[Limit]: Restricts how much sharpness is applied. This setting can be adjusted from -50 to 50. (Default: ±0)

[Select]: In addition to the sharpness set by [Level], [Select] sets the sharpness for areas with higher frequencies. Higher values apply more sharpness to areas with higher frequencies. Use this for subjects in which normal sharpening is not effective. This setting can be adjusted from 0 to 15. (Default: 0)

Downloaded From camera-usermanual.com Canon Manuals

[Knee Aperture]: Allows you to set the sharpness of only the areas above the knee point by adjusting the gain and slope. This is not available when [Gamma] is set to [Cine 1], [Cine 2], [EOS Std.] or [Canon Log].

[Gain]: Sets the amount of sharpness. This setting can be adjusted from 0 to 9. (Default: 0)

[Slope]: Sets the slope of the sharpness. This setting can be adjusted from 0 to 3, with 0 having no slope, 1 having a steep slope and 3 having a gradual slope. (Default: 1)

[Level Depend]: Lowers the amount of sharpness applied to dark areas of the image.

[Level]: Sets the brightness of the dark areas of the image that will be affected. This setting can be adjusted from 0 to 50. (Default: 0)

[Slope]: Determines the slope of the area between the upper and lower parts of the gamma curve. This setting can be adjusted from 0 to 3, with 0 having no slope, 1 having a steep slope and 3 having a gradual slope. (Default: 0)

[Offset]: Adjusts the sharpness level of dark areas in the image. Setting higher values will lower the sharpness level. This setting can be adjusted from 0 to 50. (Default: 0)

[Noise Reduction]

Reduces the amount of noise that appears in the image. Select a level from 1 (lowest level) to 12 (highest level), or select [Off] to turn the noise reduction off. (Default: [Off])

[Skin Detail]

The camcorder applies a softening filter to areas in the picture with skin tones to give a more pleasant appearance. By changing these settings, you can determine what areas will be detected as skin tones. A zebra pattern will appear over areas on the screen that are detected as having skin tones.

[Effect Level]: Adjusts the level of the filter. The available options are [Off], [Low], [Middle] and [High]. (Default: [Off])

[Hue]: Adjusts the hue for detection of skin tones. This setting can be adjusted from -16 to 16. (Default: ±0)

[Chroma]: Adjusts the color saturation for detection of skin tones. This setting can be adjusted from 0 to 31. (Default: 16)

[Area]: Adjusts the color range for detection of skin tones. This setting can be adjusted from 0 to 31. (Default: 16)

[Y Level]: Adjusts the brightness for detection of skin tones. This setting can be adjusted from 0 to 31. (Default: 16)

[Selective NR]

The camcorder detects the characteristics of a certain color or tone and applies a noise reduction filter to the targeted areas. A zebra pattern will appear over targeted areas on the screen.

[Effect Level]: Adjusts the level of the noise reduction filter. The available options are [Off], [Low], [Middle] and [High]. (Default: [Off])

[Hue]: Adjusts the hue for the color to be detected. This setting can be adjusted from 0 to 31. (Default: 0)

[Chroma]: Adjusts the color saturation for the color to be detected. This setting can be adjusted from 0 to 31. (Default: 16)

[Area]: Adjusts the color range for the color to be detected. This setting can be adjusted from 0 to 31. (Default: 16)

[Y Level]: Adjusts the brightness for the color to be detected. This setting can be adjusted from 0 to 31. (Default: 16)

[Color Matrix]

Color matrix affects the color tones throughout the whole image.

[Select]: Available options are [Normal 1] to [Normal 4], [Cine 1] and [Cine 2], [EOS Std.], [Wide DR] and [Canon Log]. Generally, this should be the same setting as [Gamma]. After selecting an option, you can make more precise adjustments. When [Gamma] is set to [Canon Log], this setting has no effect on the picture. (Default: [Normal 1])

Downloaded From camera-usermanual.com Canon Manuals

[Gain]: Adjusts the color intensity. This setting can be adjusted from -50 to 50. (Default: ±0)

[Phase]: Adjusts the color phase. This setting can be adjusted from -18 to 18. (Default: ±0)

[R-G]: The R-G matrix changes the tint of the picture along the cyan/green and red/magenta gradations. This setting can be adjusted from -50 to 50. (Default: ±0)

[R-B]: The R-B matrix changes the tint of the picture along the cyan/blue and red/yellow gradations. This setting can be adjusted from -50 to 50. (Default: ±0)

[G-R]: The G-R matrix changes the tint of the picture along the magenta/red and green/cyan gradations. This setting can be adjusted from -50 to 50. (Default: ±0)

[G-B]: The G-B matrix changes the tint of the picture along the magenta/blue and green/yellow gradations. This setting can be adjusted from -50 to 50. (Default: ±0)

[B-R]: The B-R matrix changes the tint of the picture along the yellow/red and blue/cyan gradations. This setting can be adjusted from -50 to 50. (Default: ±0)

[B-G]: The B-G matrix changes the tint of the picture along the yellow/green and blue/magenta gradations. This setting can be adjusted from -50 to 50. (Default: ±0)

[White Balance]

Adjusts the amount of white balance throughout the whole image.

[R Gain]: Adjust the intensity of red tones. This setting can be adjusted from -50 to 50. (Default: ±0)

[B Gain]: Adjust the intensity of blue tones. This setting can be adjusted from -50 to 50. (Default: ±0)

[Color Correction]

The camcorder detects the characteristics of a certain color (color phase, chroma, area and Y level) and corrects them when recording. You can set the color correction for up to two different areas (A and B).

[Select Area]: Selects the area or areas to correct. Available options are [Area A], [Area B] and [Area A&B]. Select [Off] to turn this setting off. (Default: [Off])

[Area A Setting]: Determines the area in which colors will be corrected.

[Phase]: Adjusts the color phase for area A. This setting can be adjusted from 0 to 31. (Default: 0)

[Chroma]: Adjusts the color saturation for area A. This setting can be adjusted from 0 to 31. (Default: 16)

[Area]: Adjusts the color range for area A. This setting can be adjusted from 0 to 31. (Default: 16)

[Y Level]: Adjusts the brightness for area A. This setting can be adjusted from 0 to 31. (Default: 16)

[Area A Revision]: Sets the amount of correction for area A.

[Level]: Adjusts the amount of correction to the color saturation. This setting can be adjusted from -50 to 50. (Default: ±0)

[Phase]: Adjusts the amount of correction to the color phase. This setting can be adjusted from -18 to 18. (Default: ±0)

[Area B Setting]: Determines the area in which colors will be corrected.

[Phase]: Adjusts the color phase for area B. This setting can be adjusted from 0 to 31. (Default: 0)

[Chroma]: Adjusts the color saturation for area B. This setting can be adjusted from 0 to 31. (Default: 16)

[Area]: Adjusts the color range for area B. This setting can be adjusted from 0 to 31. (Default: 16)

[Y Level]: Adjusts the brightness for area B. This setting can be adjusted from 0 to 31. (Default: 16)

[Area B Revision]: Sets the amount of correction for area B.

[Level]: Adjusts the amount of correction to the color saturation. This setting can be adjusted from -50 to 50. (Default: ±0)

[Phase]: Adjusts the amount of correction to the color phase. This setting can be adjusted from -18 to 18. (Default: ±0)

[Other Functions]

[Setup Level]: Adjusts the black level set by the [Black] and [Master Pedestal] settings. This setting can be adjusted from -50 to 50. (Default: ±0)

Downloaded From camera-usermanual.com Canon Manuals

[Over 100%]: This function determines how the camcorder handles video signals exceeding 100%. Available options are [Through] to do nothing, [Clip] to clip the signal at 100%, and [Press] that compresses a signal of up to 108% down to 100% levels. (Default: [Through])

NOTES

- When an optional RC-V100 Remote Controller is connected to the camcorder, the following custom picture settings can be changed using the buttons and dials on the remote controller. They cannot be changed from the camcorder while the RC-V100 is connected.
  - [Black] ❯ [Master Pedestal]; [Black] ❯ [Master Black] ❯ [Red], [Blue]
  - [Black Gamma] ❯ [Level]
  - [Knee] ❯ [Slope] and [Point] (only when [Knee] ❯ [Enable] is set to [On])
  - [Sharpness] ❯ [Level]
  - [White Balance] ❯ [R Gain], [B Gain]

Downloaded From camera-usermanual.com Canon Manuals

Simplified Graphical Interface

In addition to the very detailed settings explained in the previous section (114), the camcorder offers a graphical interface for adjusting the gamma and white balance settings. Gamma settings are presented as a gamma curve and white balance settings are presented on a color plane.

Gamma Curve

[Edit File]

[Gamma]

1 After selecting a file, open the gamma curve adjustment screen.
[Edit File] [Gamma]
- The current gamma curve will be displayed on the screen.

2 Push the joystick left/right to highlight the [M] field and then push the joystick up/down to select the desired basic gamma curve.
- The numbers correspond to the [Gamma] settings explained previously (114), as follows:
  1 to 4: [Normal 1] to [Normal 4]
  5 and 6: [Cine 1] and [Cine 2]
  7: [EOS Std.]
  8: [Wide DR]
  9: [Canon Log]
- The gamma curve is displayed in white before adjustment and in red after adjustment.

3 Push the joystick left/right to highlight the [H] field or [L] field and then push the joystick up/down to select the basic gamma curve.
- The [L] value can be adjusted from 1 to 9. It is equivalent to the [Black Gamma] setting and controls the lower part of the gamma curve (dark areas of the image). This setting is not available when the [M] value is set to 8 or 9.

4 Push the joystick left/right to highlight the [H] field.
- The [H] value can be adjusted from 1 to 5. It is equivalent to the [Knee] setting and controls the upper part of the gamma curve (highlights of the image). This setting is not available when the [M] value is set to 5 or higher.

5 Push the joystick left/right to select [Set] and then press the joystick.
- The adjusted gamma curve will be saved. The [Gamma], [Black Gamma] and [Knee] values under the [Fine Tuning] submenu will change accordingly.

6 Press the CUSTOM PICT. button to exit the custom picture menu and apply the selected custom picture settings.

White Balance

[Edit File]

[White Balance]

1 After selecting a file, open the white balance shift screen.
[Edit File] [White Balance]
- The current white balance is shown as an orange point at the center of the WB correction coordinates.

2 Push the joystick left/right to shift the white balance along the blue (B)/amber (A) gradation. Push the joystick up/down to shift the white balance along the green (G)/magenta (M) gradation.
- The white balance shift can be set to one of 9 levels in each color's direction.
- The amount of white balance shift will be displayed as two coordinates in the [SHIFT] box to the left of the graph.

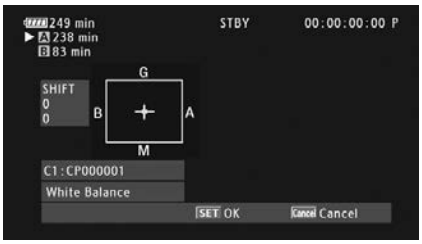

3 Press the joystick.
- The adjusted white balance shift value will be saved. The [White Balance] value under the [Fine Tuning] submenu will change accordingly.

4 Press the CUSTOM PICT. button to exit the custom picture menu and apply the selected custom picture settings.

Downloaded From camera-usermanual.com Canon Manuals

Customizing Functions and Onscreen Displays

Customize the camcorder to match your shooting style and needs. Use the [Other Functions] ➤ [Custom Function] setting to adjust how some of the camcorder's controls and functions operate in CAMERA mode. Similarly, use the [OLED/VF Setup] ➤ [Custom Display 1] or [Custom Display 2] setting to customize the onscreen displays that appear during recording. You can save these preferences along with other menu settings to an SD card and use them again later (📖 123).

Customizing Functions

The following table describes which functions can be customized using [Custom Function].

[Other Functions]
[Custom Function]

Operating modes: CAMERA MEDIA | AVCHD MP4

1 Open the [Custom Function] submenu.
[Other Functions] ➤ [Custom Function]
2 Select the desired function.
3 Change the setting option and then press the joystick.

Customizable functions with [Custom Function]

Menu item	Description
[Shockless WB]	When this function is set to [On], it creates a softer transition when the white balance is changed.
[AE Response]	Controls the camcorder's response ([Fast], [Normal] or [Slow]) when you change the automatic exposure setting.
[Grip Ctrl Dial Dir.]	Changes the direction of the adjustment ([Normal] or [Reverse]) when operating the control dial.
[Retract Lens]	When an optional Canon EF40mm f/2.8 STM lens is attached to the camcorder, the lens will fully retract when the camcorder is turned off.
[Focus Assistance B&W]	Automatically switches the screen to B&W while the focus assist functions (peaking and magnification) are activated. You can have the screen switch to B&W only when peaking is activated ([Peaking]), only when the magnification is activated ([Magnify]) or when either function is activated ([Both]).
[Magn. Add. Disp.]	Simultaneously activates peaking ([Peaking]) or displays the edge monitor ([Edge Monitor]) whenever the magnification function is used.
[Scan Reverse Rec]	Inverts the recorded image horizontally ([Horizontal]), vertically ([Vertical]) or both ([Both]).
[🔒 START/STOP]	Selects whether the START/STOP button will be active or locked too when the POWER switch is set to 🔒 (key lock) (📖 49).

Downloaded From camera-usermanual.com Canon Manuals

Customizing Onscreen Displays

For details on which onscreen displays can be customized, refer to *Onscreen Displays* (📖 50).

Operating modes: CAMERA MEDIA

[OLED/VF Setup]

[Custom Display 1]
[Custom Display 2]

1 Open the [Custom Display 1] or [Custom Display 2] submenu.
[OLED/VF Setup] ▶ [Custom Display 1] or [Custom Display 2]

2 Select the desired onscreen display.

3 Change the setting option and then press the joystick.

Downloaded From camera-usermanual.com Canon Manuals

Saving and Loading Camera Settings

After you adjust custom picture settings and settings in the various menus, you can save those settings on an SD card. You can load those settings at a later date or on another C100 Mark II camcorder so that you can use that camcorder in that same exact way.

Operating modes: CAMERA MEDIA | AVCHD MP4

Saving Camera Settings to an SD Card

[Other Functions] > [Transfer Menu/CP] > [Save To SD]

1 Open the [Save To SD] submenu.
[Other Functions] > [Transfer Menu/CP] > [Save To SD]

2 Select [SD A] or [SD B] and then press the joystick.

3 Select [Menu] or [Menu+CP] and then press the joystick.
- Selecting [Menu] will save menu settings and [Menu+CP] will save menu and custom picture settings.

4 Select [OK] and then press the joystick.
- The current settings are saved to the SD card. If the SD card already has camera settings on it, they will be overwritten.

5 When the confirmation screen appears, press the joystick.

Loading Camera Settings from an SD Card

[Other Functions] > [Transfer Menu/CP] > [Load From SD]

1 Open the [Load From SD] submenu.
[Other Functions] > [Transfer Menu/CP] > [Load From SD]

2 Select [SD A] or [SD B] and then press the joystick.

3 Select [Menu] or [Menu+CP] and then press the joystick.
- Selecting [Menu] will load menu settings and [Menu+CP] will load menu and custom picture settings.

4 Select [OK] and then press the joystick.

5 When the confirmation screen appears, press the joystick.

NOTES
- When loading camera settings from an SD card, even protected custom picture files in the camcorder will be replaced.
- Only camera settings from other Canon C100 Mark II camcorders can be used with this camcorder.
- The following settings are not saved on the SD card.
  - Encryption keys/passwords under [Other Functions] > [Network Settings] > [Connection Settings]
  - [Other Functions] > [Network Settings] > [FTP Server Settings] > [Password]

Downloaded From camera-usermanual.com Canon Manuals

Downloaded From camera-usermanual.com Canon Manuals

Playback

This section explains how to play back clips recorded on an SD card. For details on playing back clips using an external monitor, refer to *Connecting to an External Monitor* (📖 137). For details on viewing photos, refer to *Viewing Photos* (📖 164).

Operating modes: CAMERA | MEDIA | AVCHD | MP4

AVCHD and MP4 Index Screens

Playback functions are accessed from the index screen. To open the [AVCHD] or [MP4] index screen (for AVCHD or MP4 clips, respectively), set the camcorder to MEDIA mode. The index screen that appears will correspond to the currently selected movie format.

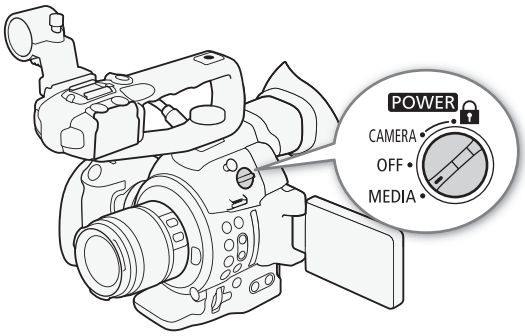

Set the POWER switch to MEDIA.

- The camcorder switches to MEDIA mode and the clip index screen appears.

AVCHD clips

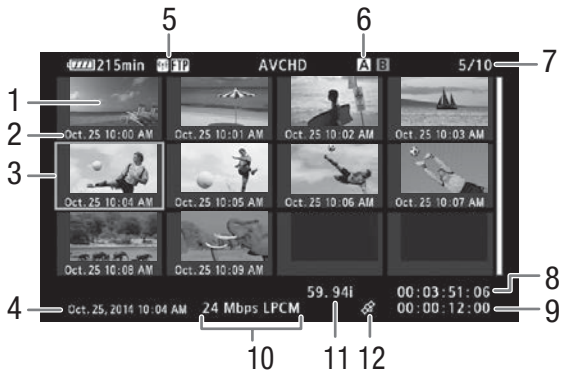

MP4 clips

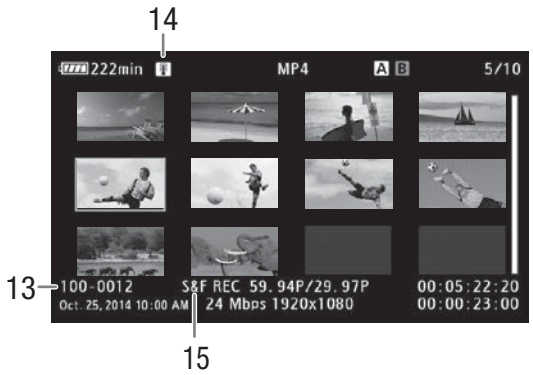

1 Clip thumbnail
2 Recording date (month and day only) and time
3 Orange selection frame
4 Recording date and time
5 Wi-Fi network type (📖 146) and FTP transfer (📖 158)
6 Currently selected SD card slot (📖 126)
7 Clip number / Total number of clips
8 Clip's start time code
9 Total clip length
10 Bit rate and audio recording mode* (📖 54)
11 Frame rate** (📖 55)
12 Clips tagged with GPS information
13 File number (📖 95)
14 High temperature warning (📖 52)
15 Special recording mode (📖 96)

* The audio recording mode is only displayed for AVCHD clips recorded using the [28 Mbps LPCM] and [24 Mbps LPCM] bit rates.
** For MP4 clips recorded using slow & fast motion recording mode, the shooting frame rate and playback frame rate will both be displayed.

Downloaded From camera-usermanual.com Canon Manuals

Switching Between the SD Card Slots

If both SD card slots contain an SD card, you can switch between them as necessary.

Operating modes: CAMERA MEDIA | AVCHD MP4

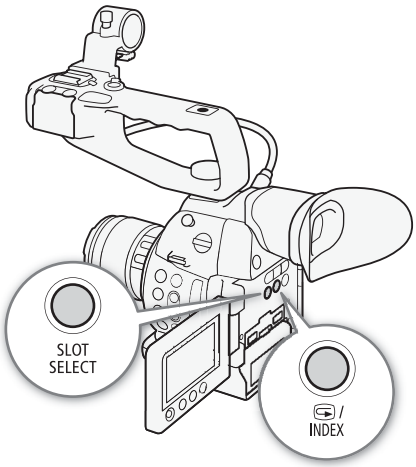

Press the SLOT SELECT button.

- The access indicator of the selected SD card slot will illuminate in green.

Switching to Other Index Screens

To view other recordings on the currently selected SD card, you can switch to any index screen from the [AVCHD] index screen*. Open the [AVCHD] index screen to view AVCHD clips, the [Shot List] index screen to view shots recorded during continuous recording, the [MP4] index screen to view MP4 clips and the [Photos] index screen to view photos.

* When any other index screen is displayed, you can switch only to the [AVCHD] index screen.

Operating modes: CAMERA MEDIA | AVCHD MP4

1 Press the INDEX button.
   - The index screen selection menu appears.
2 Select the desired index screen and then press the joystick.
   - The selected index screen appears.
   - Select [Cancel] instead to cancel the operation.
   - Press the INDEX button again to return to the [AVCHD] index screen.

NOTES

- If you set the camcorder to MEDIA mode during continuous recording mode, the [Shot List] index screen will open automatically.
- Clips recorded at a system frequency other than the one currently used by the camcorder, cannot be played back. To play back such clips, change the camcorder's system frequency (📖 54) to match the recordings on the SD card.

Downloaded From camera-usermanual.com Canon Manuals

Playing Back Clips

After you select a clip to play back from the index screen, you can control the playback with the controls on the camcorder or with the joystick and onscreen joystick guide.

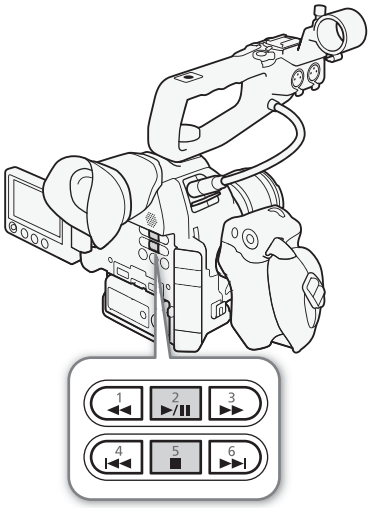

1 Move the orange selection frame to the clip you want to play back.

2 Press the ►/❚❚ button to start playback.

- Playback will start from the clip selected and continue until the end of the last clip in the index screen. When the last frame of the last clip is reached, playback will be paused.
- Press the ►/❚❚ button again or press the joystick to pause/resume the playback.
- Press the ■ button to stop the playback and return to the index screen.

IMPORTANT

- Observe the following precautions while either of the SD card access indicators is illuminated in red. Failure to do so may result in permanent data loss.
  - Do not disconnect the power source or turn off the camcorder.
  - Do not open the SD card compartment cover and do not remove the SD cards.

NOTES

- You may notice brief stops in video or audio playback between clips.

Downloaded From camera-usermanual.com Canon Manuals

Onscreen Displays

AVCHD clips

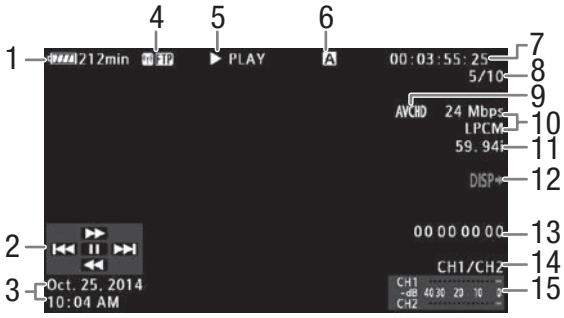

MP4 clips

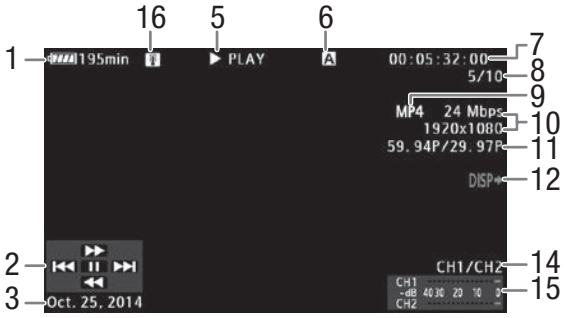

1 Remaining battery charge (📖 50)
2 Joystick guide (📖 129)
3 Recording start date and time[1]
4 Wi-Fi network type (📖 146) and FTP transfer (📖 158)
5 Playback operation
6 Currently selected SD card slot (📖 126)
7 Time code (📖 80)
8 Clip number/Total number of clips
9 Movie format (📖 54)
10 Bit rate and audio recording mode[2] (📖 54)
11 Frame rate[3] (📖 55)
12 Onscreen displays superimposed on video output (📖 139)
13 User bit (📖 83)
14 Audio output channel (📖 141)
15 Audio level meter[4]
16 High temperature warning (📖 52)

[1] Appears when [OLED/VF Setup] ➤ [Display Date/Time] is set to [On]. For MP4 clips, only the date is displayed.
[2] The audio recording mode is only displayed for clips recorded using the [28 Mbps LPCM] and [24 Mbps LPCM] bit rates.
[3] For MP4 clips recorded using slow & fast motion recording mode, the shooting frame rate and playback frame rate will both be displayed.
[4] Appears when [OLED/VF Setup] ➤ [Audio Level] is set to [On].

5 Playback operation

▶ PLAY	Playback
❚❚ PAUSE	Playback pause
◀❚❚/❚❚▶	Frame reverse/Frame advance
F FWD ▶▶	Fast playback*
◀◀ F REV	Fast reverse playback*

* The playback speed (x5, x15 or x60) will also appear in the indicator.

Downloaded From camera-usermanual.com Canon Manuals

Playback Controls

When you play back a clip, operate the buttons on the camcorder's body or use the joystick and joystick guide to use fast playback, play back frame-by-frame or skip clips. Refer to the following table.

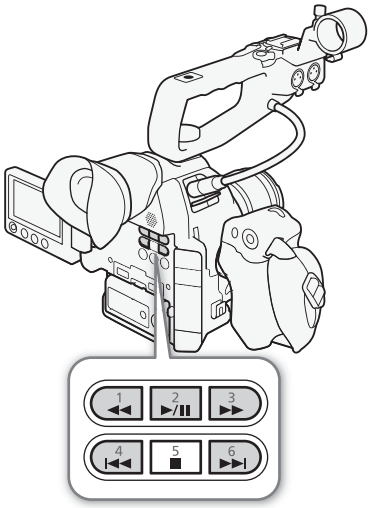

Available playback types

Playback type	Operation
Fast playback	Buttons: Press the ◀◀ or ▶▶ button. Joystick: During playback, push the joystick up or down. Repeat to increase the playback speed to approximately 5x → 15x → 60x the normal speed.
Frame advance/reverse	Joystick: During playback pause, push the joystick up or down.
Skip to the beginning of the next clip	Buttons: Press the ▶▶I button. Joystick: Push the joystick right.
Skip to the beginning of the current clip	Buttons: Press the I◀◀ button. Joystick: Push the joystick left.
Skip to the previous clip	Buttons: Press the I◀◀ button twice. Joystick: Push the joystick left twice.
Return to playback mode	Buttons: Press the ▶/❚❚ button. Joystick: Press the joystick itself.

NOTES

- There is no audio during any of the playback types listed in the previous table.
- During some playback modes, you may notice some anomalies (blocky video artifacts, banding, etc.) in the playback picture.
- The speed indicated on the screen is approximate.
- During frame reverse, the interval between frames is 0.5 seconds, which is longer than the interval during frame advance.
- You can press the DISP. button to turn the joystick guide display on and off.

Adjusting the Volume

During playback, audio will come from the monaural built-in speaker or headphones. When you connect headphones to the ∩ (headphone) terminal, the built-in speaker will be muted.

1 Open the [Headphone Volume] or [Speaker Volume] submenu.

[♪)) Audio Setup] ➧ [Audio Output] ➧ [Headphone Volume] or [Speaker Volume]

2 Select the desired level and then press the joystick.

- Select [Off] to mute the audio.

[♪)) Audio Setup]
[Audio Output]
[Headphone Volume]
[Speaker Volume]
[8]

Downloaded From camera-usermanual.com Canon Manuals

NOTES

- For details on changing the audio channel, refer to *Selecting the Audio Channel* (📖 141).
- If you set an assignable button to [Headphone +], [Headphone -], [Speaker +] or [Speaker -] (📖 107), you can press the button to adjust the headphone volume or built-in speaker volume without using the menu.

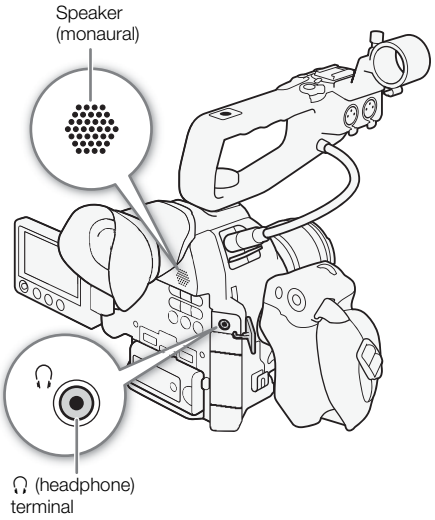

Downloaded From camera-usermanual.com Canon Manuals

Clip Operations

You can use the clip menu in the [AVCHD] index screen or [MP4] index screen to copy clips, delete clips and convert clips to MP4. You can use the functions in the [Other Functions] menu to perform some of the operations on all the clips or a selection of clips.

Operating modes: CAMERA MEDIA | AVCHD MP4

Using the Clip Menu

1 Select a clip and then press the joystick.
- The clip menu appears.

2 Select the desired function and then press the joystick.

3 Select [OK] and then press the joystick to perform the operation.
- Select [Cancel] instead to cancel the operation.

4 When the confirmation message appears, press the joystick.

IMPORTANT
- Observe the following precautions while either of the SD card access indicators is illuminated in red. Failure to do so may result in permanent data loss.
  - Do not disconnect the power source or turn off the camcorder.
  - Do not open the SD card compartment cover and do not remove the SD cards.

NOTES
- When performing clip operations, make sure the LOCK switch on the SD cards used is not set to prevent writing.

Copying Clips

You can copy clips from one SD card to the other.

Copying a Single Clip

1 Select the desired clip and then press the joystick to open the clip menu.

2 Select [Copy] and then press the joystick.

3 Select [OK] and then press the joystick.
- Select [Cancel] instead to cancel the operation.
- While the clip is being copied, you can press the joystick to cancel.

4 When the confirmation message appears, press the joystick.
- The selected clip is copied to the other SD card and the screen changes back to the clip index screen.

Downloaded From camera-usermanual.com Canon Manuals

Copying Multiple Clips

[Other Functions] > [Clips] > [Copy]

1 Open the [Copy] submenu.
[Other Functions] > [Clips] > [Copy]
2 Select [Select] to select which clips to copy or [All] to copy all the clips and then press the joystick.
- If you selected [Select], use the joystick to move between the clips. Press the joystick to select a clip to copy and repeat as necessary (up to 100 clips). After selecting all the desired clips, press the MENU button.

3 Select [OK] and then press the joystick.
- Select [Cancel] instead to return to the clip selection screen.
- While the clips are being copied, you can press the joystick to cancel.

4 When the confirmation message appears, press the joystick.

Deleting Clips and Shots

You can delete clips or shots you are not interested in keeping from the SD card. When you delete a shot, only the in point/out point marks within the continuous recording clip are deleted but the video file itself is not deleted. Although the following procedures make reference only to clips, unless stated otherwise, the procedures are the same when deleting shots.

Deleting a Single Clip/Shot

1 Select the desired clip and then press the joystick to open the clip menu.
2 Select [Delete] and then press the joystick.
3 Select [OK] and then press the joystick.
- Select [Cancel] instead to cancel the operation.
- While the clip is being deleted, the operation cannot be canceled.

4 When the confirmation message appears, press the joystick.

Deleting Multiple Clips/Shots

[Other Functions] > [Clips] > [Delete] (for clips)

[Other Functions] > [Delete Shots] (for shots)

1 Open the [Delete] submenu (for clips) or [Delete Shot] submenu (for shots).
[Other Functions] > [Clips] > [Delete]
[Other Functions] > [Delete Shot]
2 Select [Select] to select which clips to delete or [All] to delete all the clips and then press the joystick.
- If you selected [Select], use the joystick to move between the clips. Press the joystick to select a clip to delete and repeat as necessary (up to 100 clips). After selecting all the desired clips, press the MENU button.

3 Select [OK] and then press the joystick.
- Select [Cancel] instead to return to the clip selection screen.
- While the clips are being deleted, you can press the joystick to cancel.

4 When the confirmation message appears, press the joystick.

Downloaded From camera-usermanual.com Canon Manuals

Converting Clips to MP4

You can convert an AVCHD or MP4 clip into an MP4 clip. The converted clip will have a bit rate of 3 Mbps and a resolution of 640x360. (When the source clip to be converted is an MP4 clip, it will, in fact, be resized to a smaller MP4 clip.) This procedure requires two SD cards: one (source) that contains the source clips to be converted and the other one (destination) that will store the converted files.

Converting a Single Clip

1 Select the desired clip from the index screen of the source card and then press the joystick to open the clip menu.

2 Select [Convert to MP4] and then press the joystick.
- The estimated size of the converted MP4 clip and the available space on the destination card will be displayed on the screen.

3 Select [OK] and then press the joystick.
- Select [Cancel] instead to cancel the operation.
- The clip will be played back as it is converted. While the clip is being converted, you can press the joystick to cancel.

4 When the confirmation message appears, press the joystick.
- The selected clip is converted to an MP4 clip on the destination card and the screen changes back to the clip index screen.

Converting Multiple Clips

1 Open the [Convert to MP4] submenu.
[Other Functions] ❯ [Clips] ❯ [Convert to MP4]

[Other Functions]
[Clips]
[Convert to MP4]

2 Select [Select] to select which clips to convert or [All] to convert all the clips and then press the joystick.
- If you selected [Select], use the joystick to move between the clips. Press the joystick to select a clip to convert and repeat as necessary. After selecting all the desired clips, press the MENU button.
- The estimated total size of the converted MP4 clips and the available space on the destination card will be displayed on the screen.

3 Select [OK] and then press the joystick.
- Select [Cancel] instead to return to the clip selection screen.
- The selected clips will be played back as they are converted. While the clips are being converted, you can press the joystick to cancel.

4 When the confirmation message appears, press the joystick.

Downloaded From camera-usermanual.com Canon Manuals

Frame rate of converted clips

Depending on the video configuration, some clips cannot be converted.

System frequency	Movie format	Bit rate	Frame rate before conversion	Frame rate after conversion
59.94 Hz	AVCHD	28 Mbps	Cannot be converted	
		24 Mbps, 17 Mbps, 7 Mbps	59.94i, PF29.97	29.97P
			23.98P	23.98P
	MP4	35 Mbps	Cannot be converted	
		24 Mbps, 17 Mbps, 4 Mbps, 3 Mbps	29.97P	29.97P
			23.98P	23.98P
50.00 Hz	AVCHD	28 Mbps	Cannot be converted	
		24 Mbps, 17 Mbps	50.00i, PF25.00	25.00P
		7 Mbps		
	MP4	35 Mbps	Cannot be converted	
		24 Mbps, 17 Mbps, 4 Mbps, 3 Mbps	25.00P	25.00P

NOTES

- The maximum total playback time of the clips to be converted is 12 hours.
- Clips are played back as they are converted. If you set an assignable button to [Headphone +], [Headphone -], [Speaker +] or [Speaker -] (📖 107), you can press the button to adjust the headphone volume or built-in speaker during the conversion.
- Clips cannot be converted when the SD card already contains the maximum number of folders or clips (📖 95).

Downloaded From camera-usermanual.com Canon Manuals

Video Output Configuration

The video signal output from the HDMI OUT terminal depends on the various menu settings and the capabilities of the external monitor. If necessary, you can superimpose the onscreen displays on the video displayed on the external monitor (139).

Operating modes: CAMERA MEDIA | AVCHD MP4

Video signal output for 59.94 Hz recordings

CAMERA mode

Video configuration				HDMI OUT terminal		AV OUT terminal
Movie format	Bit rate	Resolution	Frame rate	[Output] setting[1]		
				[+1920x1080 59.94P]	[Normal]	
AVCHD	28 Mbps	1920×1080	59.94P	1080/59.94P 1080/59.94i 480/59.94P	1080/59.94i 480/59.94P	480/59.94i
	24 Mbps		59.94i PF29.97 23.98P	1080/59.94i 480/59.94P		
	17 Mbps					
	7 Mbps	1440×1080				
MP4	35 Mbps	1920×1080	59.94P	1080/59.94P 1080/59.94i 480/59.94P	1080/59.94i 480/59.94P	
	24 Mbps		29.97P 23.98P	1080/59.94P 480/59.94P		
	17 Mbps					
	4 Mbps	1280×720		720/59.94P 480/59.94P		
	3 Mbps	640×360		480/59.94P		

MEDIA mode

Regardless of the video configuration of the recording, the video signal output will be the same.

HDMI OUT terminal		AV OUT terminal
[Output] setting[1]		
[+1920x1080 59.94P]	[Normal]	
1080/59.94P 1080/59.94i 480/59.94P	1080/59.94i 480/59.94P	480/59.94i

Downloaded From camera-usermanual.com Canon Manuals

Video signal output for 50.00 Hz recordings

CAMERA mode

Video configuration				HDMI OUT terminal		AV OUT terminal
Movie format	Bit rate	Resolution	Frame rate	[Output] setting[1]		
				[+1920x1080 50.00P]	[Normal]	
AVCHD	28 Mbps	1920×1080	50.00P	1080/50.00P 1080/50.00i 576/50.00P	1080/50.00i 576/50.00P	576/50.00i
	24 Mbps		50.00i PF25.00	1080/50.00i 576/50.00P		
	17 Mbps					
	7 Mbps	1440×1080				
MP4	35 Mbps	1920×1080	50.00P	1080/50.00P 1080/50.00i 576/50.00P	1080/50.00i 576/50.00P	
	24 Mbps		25.00P	1080/50.00P 576/50.00P		
	17 Mbps					
	4 Mbps	1280×720		720/50.00P 576/50.00P		
	3 Mbps	640×360		576/50.00P		

MEDIA mode

Regardless of the video configuration of the recording, the video signal output will be the same.

HDMI OUT terminal		AV OUT terminal
[Output] setting[1]		
[+1920x1080 50.00P]	[Normal]	
1080/50.00P 1080/50.00i 576/50.00P	1080/50.00i 576/50.00P	576/50.00i

[1] [Video Setup] ❯ [HDMI] ❯ [Output]

Downloaded From camera-usermanual.com Canon Manuals

Connecting to an External Monitor

When you connect the camcorder to an external monitor for recording or playback, use the terminal on the camcorder that matches the one you wish to use on the monitor. Then, select the video signal output configuration (135). Video will be output from the HDMI OUT and AV OUT terminals simultaneously.

Operating modes: CAMERA MEDIA | AVCHD MP4

Connection Diagram

We recommend that you power the camcorder from a power outlet using the compact power adapter.

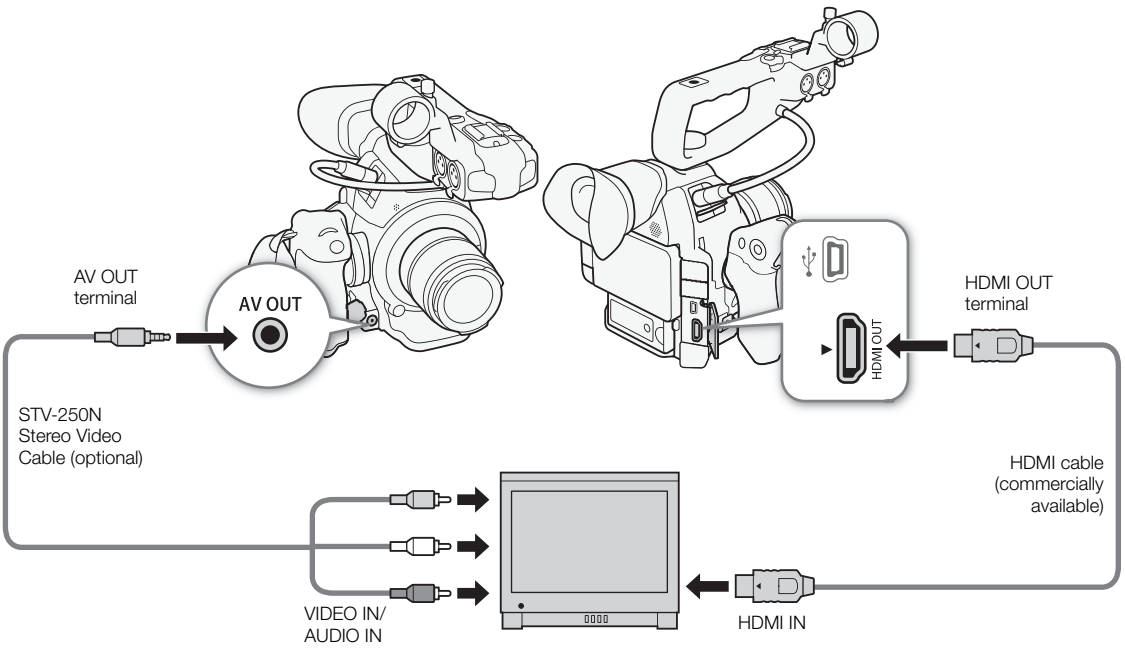

Using the HDMI OUT Terminal

The HDMI™ OUT terminal offers a digital connection and outputs both a video and audio signal. The output signal will automatically switch to HD or SD depending on the capability of the external monitor. Audio will be output as a 2ch linear PCM (16 bits, 48 kHz) signal.

1 Open the HDMI [Output] submenu.

[Video Setup] ▸ [HDMI] ▸ [Output]

2 Select the desired option and then press the joystick.

[Video Setup]
[HDMI]
[Output]
[Normal]

Downloaded From camera-usermanual.com Canon Manuals

Options

[Normal]: Video will not be output at 1920x1080 with a frame rate of 59.94P or 50.00P (depending on the system frequency).

[+1920x1080 59.94P] or [+1920x1080 50.00P]: Allows video to be output at 1920x1080 with a frame rate of 59.94P or 50.00P (depending on the system frequency).

Applying a LUT to Video from the HDMI OUT Terminal

When recording with Canon Log gamma, you can apply a LUT to the video being output from the HDMI OUT terminal.

Operating modes: CAMERA MEDIA | AVCHD MP4

[Video Setup] > [HDMI] > [LUT] > [Setting: Off] / [Select: BT. 709]

1 Open the LUT [Setting] submenu.
[Video Setup] > [HDMI] > [LUT] > [Setting]
2 Select [On] and then press the joystick.
3 Select [Select] to open the LUT selection submenu.
4 Select the desired option and then press the joystick.
- The selected LUT will be applied.

Options

[BT. 709]: Converts to a gamma curve based on the ITU-R BT.709 standard.

[Wide DR]: Converts to a gamma curve with a wide dynamic range.

NOTES

- If necessary, you can superimpose the onscreen displays on the video displayed on the external monitor (139).
- You can select the SD output method (139).
- The HDMI OUT terminal on the camcorder is for output only. Do not connect it to an HDMI output terminal on an external device, as this may damage the camcorder.
- There will be no video output from the AV OUT terminal while an external monitor is connected to the HDMI OUT terminal.
- Correct operation cannot be guaranteed when connecting the camcorder to DVI monitors.
- Video may not be output correctly depending on the monitor. In such case, use the AV OUT terminal.

Using the AV OUT Terminal

The AV OUT terminal outputs a down-converted analog video signal and audio signal for connection to monitors with a composite audio/video input.

NOTES

- When you play back a clip on a monitor with a 4:3 aspect ratio, the monitor will switch automatically to widescreen mode if it is compatible with the Video ID-1 or WSS system.
- If necessary, you can superimpose the onscreen displays on the video displayed on the external monitor (139).

Downloaded From camera-usermanual.com Canon Manuals

SD Output

[Video Setup]
[SD Output]
[Squeeze]

When HD video (16:9 aspect ratio) is converted and output as SD video (4:3 aspect ratio) from the HDMI OUT or AV OUT terminal, you can choose how it appears on the external monitor.

Operating modes: CAMERA MEDIA | AVCHD MP4

1 Open the [SD Output] submenu.
[Video Setup] ❯ [SD Output]

2 Select the desired option and then press the joystick.

Options

[Letterbox]: The image is made smaller while maintaining the aspect ratio and black letterbox bars are added to the top and bottom of the image.

[Squeeze]: The image is squeezed from the left and right so that the entire image fits within the screen. The image will appear normal if the external monitor also has a 16:9 aspect ratio.

[Side Crop]: The left and right sides of the image are cropped so that the central part of the image fits within the screen.

Original image (16:9)

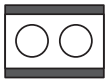
[Letterbox] setting

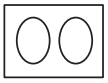
[Squeeze] setting

[Side Crop] setting

NOTES

- The [SD Output] setting applies also to the reviewing of the last clip recorded (📖 94).
- In CAMERA mode, the [Squeeze] setting is applied and cannot be changed.

Superimposing Onscreen Displays to Appear on an External Monitor

[Video Setup]
[HD Onscreen Displays]
[SD Onscreen Displays]
[Off]

By default, onscreen displays are shown on the viewfinder but you can choose to superimpose onscreen displays on video output from the HDMI OUT terminal or AV OUT terminal. Doing so will display the onscreen displays on an external monitor. You must set this function separately for HD and SD output. The onscreen displays will not appear in your recordings.

Operating modes: CAMERA MEDIA | AVCHD MP4

1 Open the [HD Onscreen Displays] or [SD Onscreen Displays] submenu.
[Video Setup] ❯ [HD Onscreen Displays] or [SD Onscreen Displays]

2 Select [On] and then press the joystick.

- DISP appears on the upper right of the screen (when [OLED/VF Setup] ❯ [Custom Display 2] ❯ [Output Display] is set to [On]).

NOTES

- During 1080/59.94P and 1080/50.00P output, onscreen displays will not appear on an external monitor.

Downloaded From camera-usermanual.com Canon Manuals

- During SD video output in MEDIA mode, onscreen displays will not appear on an external monitor if [Video Setup] [SD Output] is set to [Side Crop].
- If you set an assignable button to [Onscreen Display] (107), you can press the button to turn on and off the superimposing of onscreen displays on video output from the camcorder's terminals (simultaneously for HD and SD video).

Downloaded From camera-usermanual.com Canon Manuals

Audio Output

The camcorder can output audio from the HDMI OUT terminal, AV OUT terminal or 🎧 (headphone) terminal. When audio is output from the AV OUT terminal or 🎧 (headphone) terminal, you can configure other settings, such as the output channel.

Selecting the Audio Channel

[♪)) Audio Setup] > [Audio Output] > [Monitor Channels] > [CH1/CH2]

You can select the audio channel that is output from the AV OUT terminal or 🎧 (headphone) terminal.

Operating modes: CAMERA MEDIA | AVCHD MP4

1 Open the [Monitor Channels] submenu.
[♪)) Audio Setup] > [Audio Output] > [Monitor Channels]

2 Select the desired option and then press the joystick.

Options

[CH1/CH2]: Audio from CH1 is output from the left audio channel and audio from CH2 is output from the right audio channel.
[CH1/CH1]: Audio from CH1 is output from both the left and right audio channels.
[CH2/CH2]: Audio from CH2 is output from both the left and right audio channels.
[CH1+2/CH1+2]: Audio from CH1 and CH2 is mixed and output from both the left and right audio channels.

ⓘ NOTES

- If you set an assignable button to [Monitor Channels] (📖 107), you can press the button to change the audio channel directly.

Synchronizing the Video with the Audio being Monitored

[♪)) Audio Setup] > [Audio Output] > [Monitor Delay] > [Line Out]

When audio is output from the AV OUT terminal or 🎧 (headphone) terminal, you can choose to synchronize the audio signal with the video signal or have the camcorder output the audio in real time. When the audio is output in real time, there will be a slight delay. Regardless of the setting, however, the audio and video signals recorded will be synchronized.

Operating modes: CAMERA MEDIA | AVCHD MP4

1 Open the [Monitor Delay] submenu.
[♪)) Audio Setup] > [Audio Output] > [Monitor Delay]

2 Select the desired option and then press the joystick.

Options

[Line Out]: Synchronizes the audio and video signals.
[Normal]: Allows you to monitor the audio in real time.

Downloaded From camera-usermanual.com Canon Manuals

Selecting the Output Level of the AV OUT Terminal

You can select the output level of audio that is output from the AV OUT terminal.

Operating modes: CAMERA MEDIA | AVCHD MP4

[♪)) Audio Setup] > [Audio Output] > [Level] > [1 Vrms]

1 Open the audio ouput [Level] submenu.

[♪)) Audio Setup] ➤ [Audio Output] ➤ [Level]

2 Select the desired level and then press the joystick.

Options

[1 Vrms]: The audio output level is normal.

[2 Vrms]: The audio output level is 6 dB higher.

NOTES

- This setting does not affect audio output to headphones.

Downloaded From camera-usermanual.com Canon Manuals

Saving Clips to a Computer

You can use the supplied software **Data Import Utility** to save your AVCHD and MP4 clips. Refer to PIXELA's Web site below (English only) for the latest information about the software.
http://www.pixela.co.jp/oem/canon/e/index_biz.html
For other inquires regarding the software, consult a Canon Service Center.

Operating modes: CAMERA MEDIA | AVCHD MP4

Saving Clips Using Data Import Utility:

- Save clips to the computer.
- Join relay clips (📖 43) that were saved on separate SD cards and save them as a single clip.
- Join multiple video stream files of a single clip split because of the 4 GB maximum file size restriction and save them as a single clip.

For more details, including system requirements and how to install the software, check the **Data Import Utility** Software Guide, a PDF file in the [\Manual\English] folder of the supplied CD-ROM.

Connection Diagram

We recommend that you power the camcorder from a power outlet using the compact power adapter.

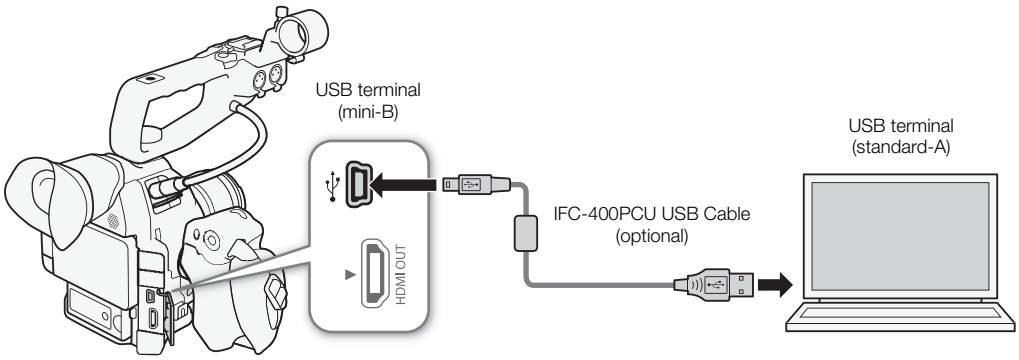

IMPORTANT

- Before saving clips to your computer with **Data Import Utility** using an SD card reader or your computer's memory card slot, do not access or manipulate the files on the SD card with other software. Failing to do so may result in not being able to save the files to your computer.

Downloaded From camera-usermanual.com Canon Manuals

Downloaded From camera-usermanual.com Canon Manuals

About the Wi-Fi Functions

After you connect the camcorder to a network via Wi-Fi (📖 146), you can use the following functions. You can save up to 5 network configurations and switch easily between them depending on your working environment. You can check the current network settings on the status screens (📖 181) and change them if necessary (📖 152).

Wi-Fi functions and connection types

Function	Description	Wi-Fi connection		📖
		Infrastructure[1]	Camera Access Point[2]	
Browser Remote	Control the camcorder remotely from the Web browser of a connected device.	–	●	153
FTP File Transfer	Transfer clips and photos recorded with the camcorder to another device connected to the network using the FTP protocol.	●	●	158
Playback via Browser	Access the MP4 clips or photos recorded on the SD card in the camcorder from the Web browser of a connected device to play back or save locally.	–	●	161

[1] Connection to a Wi-Fi network via an external access point (wireless router, etc.)
[2] Direct connection to one Wi-Fi-enabled device where the camcorder serves as the Wi-Fi access point.

Before using the Wi-Fi functions

- The instructions in this chapter assume you already have a correctly configured and working network, network device(s) and/or Wi-Fi access point. If necessary, refer to the documentation provided with the network devices you want to use.
- Configuring the network settings requires adequate knowledge about configuring and using wireless (Wi-Fi) networks. Canon cannot provide support regarding network configurations.

IMPORTANT

- Canon shall not be liable for any loss of data or damage resulting from incorrect network configuration or settings. Additionally, Canon shall not be liable for any loss or damage caused by the use of Wi-Fi functions.
- Using an unprotected Wi-Fi network can expose your files and data to monitoring by unauthorized third parties. Be aware of the risks involved.

NOTES

- **About the Wi-Fi antenna**: When using the camcorder's Wi-Fi functions, do not cover the Wi-Fi antenna with your hand or other object. Covering it may interfere with wireless signals.
- Do not open the SD card slot cover while using Wi-Fi functions.

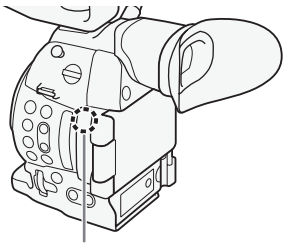
Wi-Fi antenna

Downloaded From camera-usermanual.com Canon Manuals

Connecting to a Wi-Fi Network

The camcorder is Wi-Fi certified and can connect to a Wi-Fi network using an external access point (wireless router) or can itself serve as a Wi-Fi access point. The camcorder can connect to wireless routers (access points) compliant with the 802.11a*/b/g/n protocol and that are Wi-Fi certified (bear the logo shown on the right).

The camcorder offers 5 ways to connect to a Wi-Fi network and the method you use will depend on the type and specifications of the access point and network you want to use. Note that using an unprotected Wi-Fi network can expose your data to monitoring by unauthorized third parties. Be aware of the risks involved.

* The 802.11a protocol is not available for camcorders whose identification label contains the camcorder ID "ID0041" and the text "2.4 GHz only" (📖 203).

Operating modes: CAMERA MEDIA | AVCHD MP4

Wi-Fi network connection types

Connection type	Description
WPS (button)	If your wireless router supports Wi-Fi Protected Setup (WPS), setup will be easy and require minimal configuring and no passwords. To check if your wireless router has a WPS button and for details about how to activate the wireless router's Wi-Fi function, refer to the instruction manual of your wireless router.
WPS (PIN code)	Even if your wireless router does not have a dedicated WPS button, it may support WPS using a PIN code instead. For setup using a PIN code, you will need to know in advance how to activate the wireless router's WPS function. For details refer to the instruction manual of your wireless router.
Searching for Access Points	If your access point does not support the WPS function or you cannot activate it, you can have the camcorder search for access points in the area.
Manual Setup	If the access point you want to use has stealth mode activated and it cannot be automatically detected by the camcorder, you can enter all the necessary settings manually. This requires more advanced knowledge of Wi-Fi and network settings.
Camera Access Point	When shooting in a location where there are no access points available, the camcorder can serve as a wireless access point*. Wi-Fi enabled devices will be able to connect to the camcorder directly.

* Limited only to the connection between the camcorder and supported Wi-Fi enabled devices. The functionality is not the same as that of commercially available access points.

Wi-Fi Protected Setup (WPS)

Wi-Fi Protected Setup (WPS) is the easiest way to connect to a Wi-Fi access point. You can do so simply by pushing a button (if the access point (wireless router) you want to connect to has a WPS button) or using a PIN code issued by the camcorder.

Wireless Routers with a WPS Button

1 Open the [Set Up New] submenu.

[Other Functions] ➤ [Network Settings] ➤ [Connection Settings] ➤ [Set Up New]

2 Select the [WPS: Button] method.

[Infrastructure] ➤ [WPS: Button]

3 Activate the WPS function on the wireless router.

- Refer to the instruction manual of your wireless router and make sure the wireless router's WPS function is activated.

[Other Functions]
[Network Settings]
[Connection Settings]
[Set Up New]

Downloaded From camera-usermanual.com Canon Manuals

4 Within 2 minutes, press the joystick on the camcorder.
- While [Connecting] appears on the screen, you can press the joystick or the CANCEL button to cancel the operation.
- After the connection is correctly established, continue with the procedure to configure the IP address assignment (📖 150).

NOTES
- The [WPS: Button] method may not work correctly if there are several active access points in the area. In such case try using [WPS: PIN Code] or [Search for Access Points] (📖 147) instead.

WPS using a PIN code

1 Open the [Set Up New] submenu.
[Other Functions] ▶ [Network Settings] ▶ [Connection Settings] ▶ [Set Up New]

2 Select the [WPS: PIN Code] method.
[Infrastructure] ▶ [WPS: PIN Code]
- The camcorder will generate and display an 8-digit PIN code.

3 Enter the PIN code from step 2 into the wireless router's WPS (PIN code) setup screen.
- For most wireless routers, you must use a Web browser to access the setup screen.
- For details about how to access your wireless router's settings and activate the Wi-Fi Protected Setup (WPS) using a PIN code, refer to the instruction manual of your wireless router.

4 Within 2 minutes, press the joystick on the camcorder.
- While [Connecting] appears on the screen, you can press the joystick or the CANCEL button to cancel the operation.
- After the connection is correctly established, continue with the procedure to configure the IP address assignment (📖 150).

Searching for Access Points

The camcorder will automatically detect access points in the vicinity. After you select the desired access point, you only need to enter the selected network's encryption key (password) to connect the camcorder. For details about the encryption key, refer to the instruction manual of the wireless router or consult the network administrator.

1 Open the [Set Up New] submenu.
[Other Functions] ▶ [Network Settings] ▶ [Connection Settings] ▶ [Set Up New]

2 Select the [Search for Access Points] method.
[Infrastructure] ▶ [Search for Access Points]
- The camcorder will search for active access points in your area and display a list of available options.

[Other Functions]
[Network Settings]
[Connection Settings]
[Set Up New]

Downloaded From camera-usermanual.com Canon Manuals

3 Push the joystick up/down to select the desired access point and then press the joystick.

- If the access point is encrypted (🔒), enter the encryption key (password) with the following procedure. Otherwise, continue with the procedure to configure the IP address assignment (📖 150).

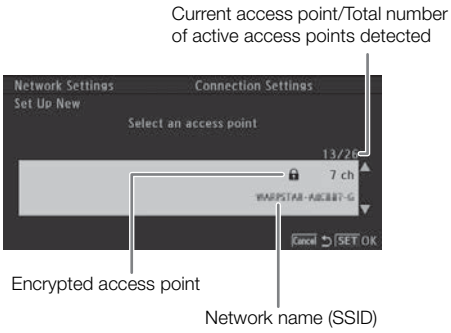

Encrypted Access Points

1 If necessary, select the WEP index key.

- This step is only necessary if the Wi-Fi network's authentication method is set to [Shared Key] or if the encryption method is set to [WEP].

2 To enter the [Encryption Key] (password), select [Input] and then press the joystick.

- Enter the password of the selected Wi-Fi network using the keyboard screen (📖 148).

3 Continue with the procedure to configure the IP address assignment (📖 150).

ⓘ NOTES

Valid encryption keys vary depending on the encryption method.

64-bit WEP encryption: 5 ASCII characters or 10 hexadecimal characters.

128-bit WEP encryption: 13 ASCII characters or 26 hexadecimal characters.

AES / TKIP encryption: 8 to 63 ASCII characters or 64 hexadecimal characters.

* Note: ASCII characters include the numbers 0 to 9, the letters a to z and A to Z and some punctuation marks and special symbols. Hexadecimal characters comprise the numbers 0 to 9 and the letters a to f and A to F.

Using the Virtual Keyboard Screen

The virtual keyboard is displayed on the screen.

1 Use the joystick to select a character and then press the joystick to add it.

- If you are entering sensitive information, like a password, the character you entered will change to "◆" after a moment to protect the password.
- Use the arrows (⬆/⬇/⬅/➡) to change the position of the cursor and the backspace character (⌫) to delete the last character entered.
- Repeat this step as necessary to enter the desired text.

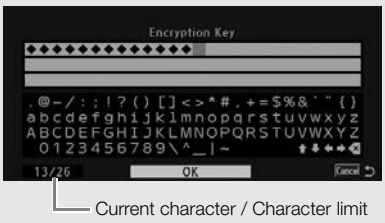

2 After entering the desired text, select [OK] and then press the joystick to close the keyboard screen.

3 Back in the original screen, select [OK] and then press the joystick to confirm the text and continue.

Downloaded From camera-usermanual.com Canon Manuals

Manual Setup

If you prefer, you can enter manually the details of the Wi-Fi network you want to connect to. Follow the instructions on the screen to complete the procedure.

[Other Functions] > [Network Settings] > [Connection Settings] > [Set Up New]

1 Open the [Set Up New] submenu.
[Other Functions] ▶ [Network Settings] ▶ [Connection Settings] ▶ [Set Up New]

2 Select the [Manual] method.
[Infrastructure] ▶ [Manual]

3 To enter the [SSID] (network name), select [Input] and then press the joystick.
- Enter the SSID (network name) of the selected Wi-Fi network using the keyboard screen (📖 148).
- After entering the network name, select [OK] and then press the joystick.

4 Select the Wi-Fi network's authentication method and then press the joystick.
- If you selected [Shared Key], skip to step 6.

5 Select the Wi-Fi network's encryption method and then press the joystick.
- If the authentication method is [Open], you can select [WEP] and continue to step 6, or [No encryption] and skip to step 7.
- If the authentication method is [WPA-PSK] or [WPA2-PSK], you can select [TKIP] or [AES].

6 Enter the encryption key as described in *Encrypted Access Points* (📖 148).

7 Continue with the procedure to configure the IP address assignment (📖 150).

Camera Access Point

In this mode the camcorder itself serves as a wireless access point to which other Wi-Fi-enabled devices can connect. Follow the instructions on the screen to complete the procedure.

[Other Functions] > [Network Settings] > [Connection Settings] > [Set Up New]

1 Open the [Set Up New] submenu.
[Other Functions] ▶ [Network Settings] ▶ [Connection Settings] ▶ [Set Up New]

2 Select [Camera Access Point].

3 To enter the [SSID] (network name), select [Input] and then press the joystick.
- Enter the SSID (network name) the camcorder will use as a Wi-Fi access point using the keyboard screen (📖 148).
- The network name is needed to connect the network device to the camcorder. If necessary, write it down.

4 Select the wireless connection mode (5 GHz band or 2.4 GHz band) and then press the joystick.
- The 5 GHz frequency band is not available for all models (📖 203).

5 Select the channel and then press the joystick.
- Available channels will be different depending on the wireless connection mode selected in the previous step.

6 Select the encryption method and then press the joystick.
- If you selected [Open/No encryption], skip to step 8. If you selected [WPA2-PSK/AES], continue with step 7.

Downloaded From camera-usermanual.com Canon Manuals

7 Enter the encryption key as described in *Encrypted Access Points* (📖 148).
- This encryption key (password) is needed to connect the network device to the camcorder. If necessary, write it down.

8 Continue with the procedure to configure the IP address assignment (📖 150).

Configuring the IP Address Settings

At this point you need to configure the TCP/IP settings for the camcorder to be able to connect to a Wi-Fi network. If you need to configure the TCP/IP settings manually, consult the network administrator to obtain the relevant information.

1 Select the method for assigning the IP address: Select [Automatic] or [Manual] and then press the joystick.
- If you selected [Automatic], IP settings will be assigned automatically. Continue with the procedure to review and save the configuration (📖 150).

2 If you selected [Manual], enter manually the IP address assigned to the camcorder.
- Push the joystick up/down to select a value for the first field and then press the joystick to move to the next field. After completing the four fields of an address, select [Set] and then press the joystick to confirm the address.

3 Enter the [Subnet Mask] and [Default Gateway] addresses in the same way.
- For Camera Access Point connections, the rest of the procedure is not necessary. Continue with the procedure to review and save the configuration (📖 150).

4 Select the method for setting up the DNS server: Select [Do not use DNS] or [Manual].
- If you selected [Do not use DNS], a DNS server will not be used. Continue with the procedure to review and save the configuration (📖 150).

5 If you selected [Manual], enter the [Primary DNS Server] and [Secondary DNS Server] using the method described in step 2.
- After entering the secondary DNS server, continue with the procedure to review and save the configuration (📖 150).

Saving the Configuration

1 Review the access point's configuration and then press the joystick.
- The first screen shows the access point's SSID and the type of connection. Push the joystick up/down to review additional settings before pressing the joystick.

2 Select the desired configuration number and then press the joystick.
- You can save up to 5 different network configuration profiles in the camcorder. If you select a configuration number that was already in use, the previous configuration will be overwritten by the new one.

3 To change the [Network Configuration Name], select [Input] and then press the joystick.
- If you wish, you can give the network configuration profile a more descriptive name to make it easier to identify. Enter the desired name using the keyboard screen (📖 148).

4 Select [OK] and then press the joystick to save the network configuration.

5 When the confirmation screen appears, press the joystick.

Downloaded From camera-usermanual.com Canon Manuals

Selecting a Network Connection

You can save up to 5 different network configuration profiles. You can select which one to use depending on where you plan to use the camcorder. If you just saved a new network configuration (📖 150), that network configuration will already be automatically selected and this procedure is not required.

1 Open the [Select] submenu.

[Other Functions] ▶ [Network Settings] ▶ [Connection Settings] ▶ [Select]

[Other Functions]
[Network Settings]
[Connection Settings]
[Select]

2 Select the desired configuration number and then press the joystick.

- The camcorder will connect to the selected network only when you activate a Wi-Fi function. The icon displayed on the top left of the screen will indicate the type of network selected and the connection status. Refer to the following table.

Connection type	Onscreen display	Connection status
Infrastructure		In yellow: The camcorder is connecting to or disconnecting from the network. In white: The Wi-Fi function can be used.
Camera Access Point	AP	In yellow: Starting the camcorder's access point. In white: The camcorder's access point is ready. Connect the Wi-Fi enabled device to the camcorder. • On the device: Open the Wi-Fi settings screen and select the network name (SSID) that was set in the camcorder. If necessary, enter the password set in the camcorder (📖 149).

Connection type

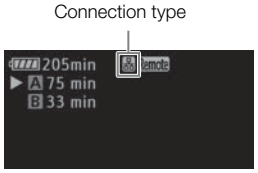

Downloaded From camera-usermanual.com Canon Manuals

Changing Network Settings

You can edit the settings of the currently selected network configuration profile even after the initial setup. Changing settings manually requires more advanced knowledge of Wi-Fi and network settings. Turn off any active Wi-Fi functions and wait until the network icons disappear from the screen before starting the procedure.

1 Select the network configuration profile whose settings you want to change (📖 151).

2 Open the [Edit] submenu.

[🔧 Other Functions] ▶ [Network Settings] ▶ [Connection Settings] ▶ [Edit]

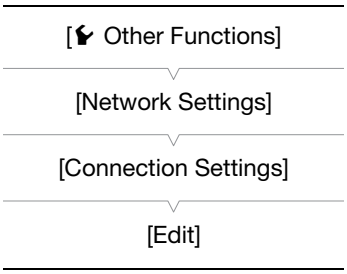

3 Continue with one of the following procedures depending on the settings you wish to change.

Changing Network Settings

4 Select [Settings] and then press the joystick.

5 Select [Infrastructure] or [Camera Access Point].

- Continue the procedure as described in *Manual Setup* (📖 149, from step 3) or *Camera Access Point* (📖 149, from step 3).

Renaming the Configuration Profile

Each network configuration profile is stored under a configuration number ([No. 1] to [No. 5]). You can rename it with a more familiar name to make it easier to distinguish between various networks you use.

4 Select [Rename] and then press the joystick.

5 To enter the new [Network Configuration Name], select [Input] and then press the joystick.

- Enter the desired network configuration name using the keyboard screen (📖 148).

Downloaded From camera-usermanual.com Canon Manuals

Browser Remote: Controlling the Camcorder from a Network Device

After connecting the camcorder to a network, you can control the camcorder remotely from the Web browser of a connected network device* using the Browser Remote application. Browser Remote lets you monitor the image through live view, start and stop recording and remotely control the shutter speed, gain and other settings. You can also check the SD cards, remaining recording time, time code, etc.

* For details about compatible devices, operating systems, Web browsers, etc., please visit your local Canon Web site.

Setting Up Browser Remote

You can set a unique camcorder identification code and designate the port that the Browser Remote application should use when accessing the camcorder through network. The port number (HTTP protocol) used by Browser Remote is usually set to port 80, but you can change it if necessary. The camcorder ID will appear on the Browser Remote screen, making it easy to identify which camcorder the application is controlling in case of a multi-camera shooting setup.

Operating modes: CAMERA MEDIA | AVCHD MP4

1 Open the [Remote Settings] submenu.
[Other Functions] ▸ [Network Settings] ▸ [Remote Settings]

[Other Functions]
[Network Settings]
[Remote Settings]

2 Push the joystick up/down to select a value for the first digit of the port number and then press the joystick to move to the next digit.

3 After completing all the digits, select [Set] and then press the joystick to confirm the port number.

4 To enter the [Camera ID], select [Input] and then press the joystick.
- Enter the desired camcorder ID using the keyboard screen (📖 148).

5 Select [OK] and then press the joystick to save the network configuration.

6 When the confirmation screen appears, press the joystick.

Starting Browser Remote

After connecting the camcorder to the network, you can start the Browser Remote application on the Web browser* of any network device connected to the same network. You can check the Browser Remote settings on the status screens (📖 183).

* A Web browser that supports JavaScript and is enabled to accept cookies is required.

Preparations on the Camcorder

Operating modes: CAMERA MEDIA | AVCHD MP4

[Other Functions]
[Browser Remote]
[Off]

1 Connect the camcorder to the desired network (📖 151).
- Select a Camera Access Point connection.

2 To activate Browser Remote on the camcorder, open the [Browser Remote] submenu.
[Other Functions] ▸ [Browser Remote]

Downloaded From camera-usermanual.com Canon Manuals

3 Select [On] and then press the joystick.

- AP Remote will appear on the top of the screen. When the icons turn white, the camcorder is ready to accept commands from the Browser Remote application.
- With Camera Access Point connections, you need to actively connect the Wi-Fi enabled device to the camcorder.

4 Check the camcorder's IP address on the status screen.

- Press the STATUS button to open the status screens and push the joystick up/down to select the [Network Settings 4/9] status screen.
- Check the IP address assigned to the camcorder ([IP Address]) and, if necessary, write it down.
- Press the STATUS button to close the status screen.

On the Connected Network Device

1 Start the Web browser on the network device.

2 Enter the camcorder's URL and start the Browser Remote application.

- Enter the IP address you checked previously into the Web browser's address bar, adding the prefix "http://".
- If you chose a port other than the default port [80], you can specify it by adding ":nnn" at the end of the URL. For example "http://192.168.0.80:095".
- The Browser Remote screen will appear.
- While the device is connected, the network connection indicator (●●●●) will repeatedly illuminate and go out.

3 Check the camcorder's ID.

- The camcorder's ID will appear on the Browser Remote screen while live view is not activated. It will not appear if the camcorder's ID has not been set.

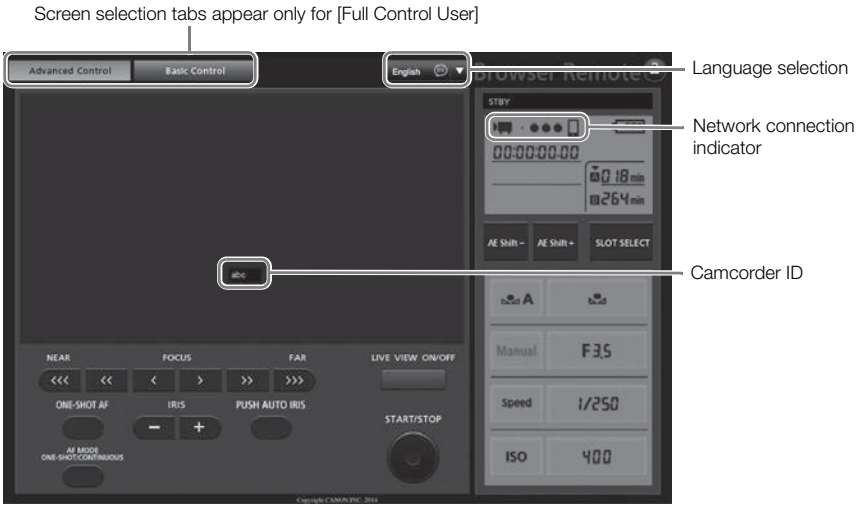

Downloaded From camera-usermanual.com Canon Manuals

4 Select the language for Browser Remote.

5 Use the Browser Remote controls to operate the camcorder.
- Descriptions of the controls are given in the following pages. Detailed operation is given in each function's reference page.

6 When you have finished using Browser Remote, on the camcorder set [Other Functions] [Browser Remote] to [Off] and the press the joystick.
- The network icons will turn yellow and then disappear from the camcorder's screen and the connection with the application will be terminated.

NOTES
- Depending on the network used and the strength of the Wi-Fi signal (for Wi-Fi connections), you may notice delays in the refreshing of the live view image and other settings.
- While color bars are displayed on the camcorder, the live view image will not be displayed.
- If Browser Remote is set to a language other than the language set on network device, the application may not be displayed correctly.

Downloaded From camera-usermanual.com Canon Manuals

The [Advanced Control] Screen

When using a computer, tablet and other devices with larger screens, the [Advanced Control] screen offers all the controls available for operating the camcorder remotely via Browser Remote. For details, refer to each function's explanation.

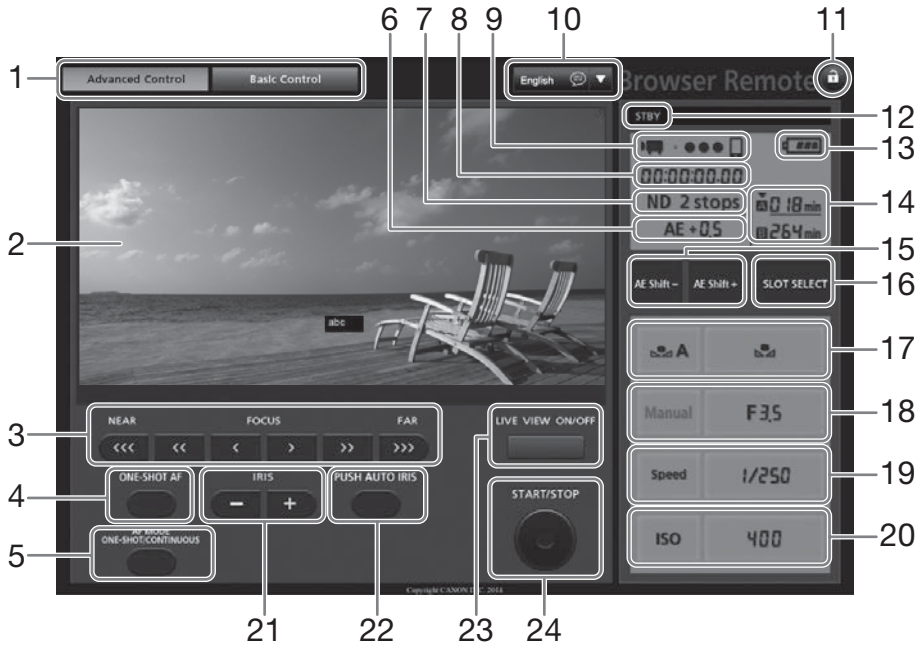

1 Browser Remote screen selection tabs
2 Live view screen
3 Focus controls (📖 71)
4 ONE-SHOT AF button (📖 75)/AF LOCK button (📖 75)
5 AF MODE button (📖 74)
6 AE shift* (📖 66)
7 ND filter* (📖 62)
8 Time code* (📖 80)
9 Network connection indicator*
10 Language selection (📖 155)
11 Key lock button
12 Recording operation (📖 51)
13 Approximate remaining battery charge*
14 SD card selection and approximate remaining recording time
15 AE SHIFT -/+ buttons (📖 66)
16 SLOT SELECT (SD card slot selection) button (📖 42)
17 White balance controls (📖 70)
18 Aperture controls (📖 63)
19 Shutter speed controls (📖 58)
20 ISO speed/Gain controls (📖 60)
21 IRIS -/+ buttons (📖 60)
22 PUSH AUTO IRIS button (📖 65)
23 LIVE VIEW ON/OFF button (📖 49)
24 START/STOP button (📖 49)

* Onscreen display/indication only. The content or value cannot be changed using Browser Remote.

Downloaded From camera-usermanual.com Canon Manuals

The [Basic Control] Screen

When using a smartphone or other device with a smaller screen, you can use the [Basic Control] screen that offers only the most important shooting controls (START/STOP, live view, and focus and aperture adjustment) but will fit in the screen without scrolling. For details, refer to each function's explanation.

1 Open the [Basic Control] screen.

From the [Advanced Control] screen press the [Basic Control] tab.

Downloaded From camera-usermanual.com Canon Manuals

FTP File Transfer

After connecting the camcorder to a network, you can transfer clips and photos from the camcorder to another device connected to the network using the FTP protocol. The following explanations assume that the FTP server is on, ready and correctly configured.

Operating modes: CAMERA MEDIA | AVCHD MP4

Preparations

Before you can transfer clips to a connected device, you need to configure the FTP server settings and other settings related to the handling of folders and files.

FTP Server Settings

To complete this procedure you will need detailed information about the FTP server that will be used as the destination when transferring clips. If necessary, consult the network administrator in charge of the FTP server.

1 Open the [FTP Server Settings] submenu.

[Other Functions] [Network Settings] [FTP Server Settings]

[Other Functions]
[Network Settings]
[FTP Server Settings]

2 To enter the [FTP Server], select [Input] and then press the joystick.

- Enter the FTP server's IP address or host name using the keyboard screen (148).
- Though the FTP server's host name is not required when using Camera Access Point connections, enter any characters to be able to continue the procedure.

3 Enter the [User Name], [Password], and [Destination Folder] in the same way.

4 To enter the [Port No.], select [Input] and then press the joystick.

- Push the joystick up/down to select a value for the first digit and then press the joystick to move to the next digit.
- After completing all the digits, select [Set] and then press the joystick.

5 Select [OK] and then press the joystick to confirm the port number.

6 Select whether to turn the passive mode [On] or [Off] and then press the joystick.

- [Off] is the standard setting for most cases. [On] (passive mode) is more appropriate for FTP transfers within a network behind a firewall.

7 Select [OK] and then press the joystick to save the FTP server configuration.

8 When the confirmation screen appears, press the joystick.

Downloaded From camera-usermanual.com Canon Manuals

FTP Transfer Settings

These settings determine the handling of files and folders on the FTP server.

1 Open the [Create Folder by Date] submenu.
[Other Functions] ▶ [Network Settings] ▶ [FTP Transfer Settings] ▶ [Create Folder by Date]

2 Select the desired option and then press the joystick.

3 Back in the [FTP Transfer Settings] submenu, select [Same Named Files] and then press the joystick.

4 Select the desired option and then press the joystick.

[Other Functions] > [Network Settings] > [FTP Transfer Settings] > [Create Folder by Date] > [On]

[Other Functions] > [Network Settings] > [FTP Transfer Settings] > [Same Named Files] > [Skip]

Options

[On]: A new subfolder under the transfer destination folder “YYYYMMDD\HHMMSS” will be created for every transfer operation.

[Off]: All the files will be transferred to the folder set as [Destination Folder] in the FTP server settings.

[Skip]: If a file with the same name already exists in the destination folder, the file will not be transferred.

[Overwrite]: Even if a file with the same name already exists in the destination folder, the file will be transferred, overwriting any file with the same name in the destination folder.

Transferring Clips and Photos

You can transfer to the FTP server clips and photos recorded on the SD card. You can check the FTP-related settings on the status screens (📖 183).

Transferring a Single Clip or Photo

1 Connect the camcorder to the desired network (📖 151).
- With Camera Access Point connections, you need to actively connect the Wi-Fi enabled device to the camcorder.

2 Select the desired clip or photo and then press the joystick to open the clip/photo menu.

3 Select [FTP Transfer] and then press the joystick.

4 Select [OK] and then press the joystick.
- Select [Cancel] instead to cancel the operation.
- FTP will appear on the top of the screen, next to the connection type icon. When the icons turn white, the clip/photo will be transferred to the FTP server.
- While the clip/photo is being transferred, you can press the joystick to cancel.
- When the transfer is completed, the network icons will turn yellow and then disappear from the screen.

Downloaded From camera-usermanual.com Canon Manuals

5 When the confirmation message appears, press the joystick.

Transferring Multiple Clips or Photos

[Other Functions] > [Clips] / [Photos] > [FTP Transfer]

1 Open the index screen that contains the clips or photos you want to transfer (126).

2 Connect the camcorder to the desired network (151).
- With Camera Access Point connections, you need to actively connect the Wi-Fi enabled device to the camcorder.

3 Open the [FTP Transfer] submenu.
[Other Functions] > [Clips] or [Photos] > [FTP Transfer]

4 Select [Select] to select which clips/photos to transfer, or [All] to transfer all the clips/photos and then press the joystick.
- If you selected [Select], use the joystick to move between the clips/photos. Press the joystick to select a clip/photo to transfer and repeat as necessary. After selecting all the desired clips/photos, press the MENU button.

5 Select [OK] and then press the joystick.
- FTP will appear on the top of the screen, next to the connection type icon. When the icons turn white, all the applicable clips/photos will be transferred to the FTP server.
- Select [Cancel] instead to cancel the operation.
- While the clips/photos are transferred, you can press the joystick to cancel.
- When the transfer is completed, the network icons will turn yellow and then disappear from the screen.

6 When the confirmation message appears, press the joystick.

IMPORTANT

- Observe the following precautions when transferring files. Failing to do so may interrupt the transfer and incomplete files may remain at the transfer destination.
  - Do not open the SD card compartment cover.
  - Do not disconnect the power source or turn off the camcorder.
- If incomplete files remain at the transfer destination, check the content and make sure they are safe to delete before deleting them.

NOTES

- Depending on the access point's settings and capabilities, it may take some time to transfer files.

Downloaded From camera-usermanual.com Canon Manuals

Playback via Browser

You can use the Playback via Browser function to access the clips and photos in the camcorder from the Web browser of a connected network device*. You can then play back your recordings using the Web browser and even save local copies of them on the device.

* Depending on the device, OS, browser and video quality, you may not be able to play back or save recordings. For details, visit your local Canon Web site.

Operating modes: CAMERA MEDIA | AVCHD MP4

1 Open the index screen that contains the clips or photos you want to play back (126).

2 Connect the camcorder to the desired network (151).
- Select a Camera Access Point connection.

3 Open the [Playback via Browser] submenu and then press the joystick to activate the function.

[Other Functions] [Playback via Browser]

[Other Functions] [Playback via Browser]
- [Connected] and the camcorder's URL will appear on the camcorder's screen.
- While the camcorder is in Playback via Browser mode, only the POWER switch, CANCEL button and the joystick (pressing it only) can be used on the camcorder.
- You need to actively connect the Wi-Fi enabled device to the camcorder.

4 Connected device: Start the Web browser and enter the URL displayed on the camcorder's screen.
- The Playback via Browser screen will appear.

5 Connected device: Play back your recordings.
- To change the index screen displayed, touch/click the button on the top left of the screen. The button shows the SD card icon (A or B) and the recording type (AVCHD, MP4 or). Touch/click AVCHD or MP4 to show clips of that type or to show photos on the desired SD card.
- Touch/click the desired recording from the list of recordings. For MP4 clips, touch/click ▶ to play back the clip. For photos, the photo will be displayed. AVCHD clips cannot be played back.
- Touch/click to return to the list of recordings.
- Devices other than iOS devices: Touch/click to save a local copy of the clip/photo on the device.

6 Camcorder: When you have finished playing back, press the joystick to end the Playback via Browser mode.

NOTES
- Only one device may be connected to the camcorder at a time.
- Long recordings, whose video stream file exceeds 4 GB, will be recognized as multiple files on other devices.

Downloaded From camera-usermanual.com Canon Manuals

Downloaded From camera-usermanual.com Canon Manuals

Taking Photos

You can take photos when the camcorder is in CAMERA mode or you can capture a photo from a clip when the camcorder is in MEDIA mode.

Taking Photos in CAMERA Mode

You can take a photo while the camcorder is recording a clip or is in record pause mode. If a custom picture file is selected in advance, it will be recorded with the photo (📖 110). To take a photo, set an assignable button to [Photo] in advance. When the movie format is AVCHD, photos will have a size of 1920x1080. When the movie format is MP4, photos will be the same size as the resolution set for the video configuration.

Operating modes: CAMERA MEDIA | AVCHD MP4

1 Set an assignable button to [Photo] (📖 107).

2 Press the assignable button to take a photo.

- A/B and the number of available photos appear momentarily on the upper right of the screen.
- If a custom picture file is selected, it will be recorded with the photo.
- The SD card access indicator will illuminate in red as the photo is being recorded.

Capturing Photos in MEDIA Mode

You can capture a photo from a clip during playback pause. To capture a photo, set an assignable button to [Photo] in advance. Photos will have a size of 1920x1080.

Operating modes: CAMERA MEDIA | AVCHD MP4

1 Set an assignable button to [Photo] (📖 107).

2 Select the desired clip and press the ▶/❚❚ button to start playback.

3 Pause the playback at the point you want to capture.

4 Press the assignable button to capture a photo.

- A/B and the number of available photos appear momentarily on the upper right of the screen.
- The photo will be saved to the SD card that the clip is saved on. The SD card access indicator will illuminate in red as the photo is being recorded.

5 Press the ■ button to stop playback.

IMPORTANT

- Observe the following precautions while either of the SD card access indicators is illuminated in red. Failure to do so may result in permanent data loss.
  - Do not disconnect the power source or turn off the camcorder.
  - Do not open the SD card compartment cover and do not remove the SD cards.

NOTES

- If the LOCK switch on the SD card selected for recording is set to prevent writing, you will not be able to record a photo. Change the position of the LOCK switch in advance.

Downloaded From camera-usermanual.com Canon Manuals

Photo Playback

You can view the photos that you took with the camcorder.

Operating modes: CAMERA | MEDIA | AVCHD | MP4

Displaying the [Photos] Index Screen

Display the [Photos] index screen to view photos.

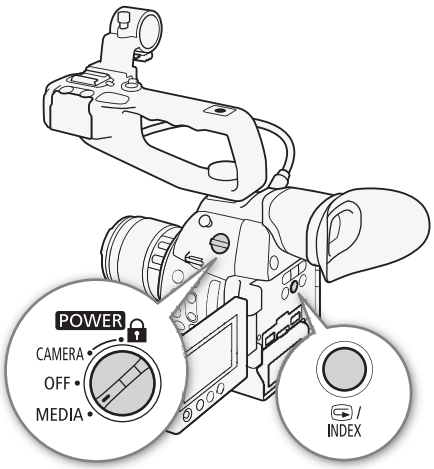

1 Set the POWER switch to MEDIA.
- The camcorder switches to MEDIA mode and the clip index screen appears.

2 Press the INDEX button.
- The index screen selection menu appears.

3 Select [Photos] and then press the joystick.
- The [Photos] index screen appears.
- After you are finished viewing photos, press the INDEX button to return to the [AVCHD] index screen.

Viewing Photos

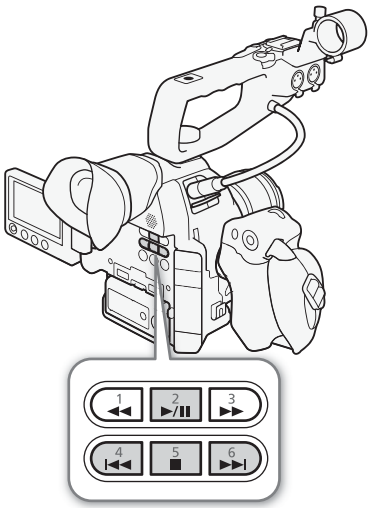

1 Move the orange selection frame to the desired photo.

2 Press the ▶/❚❚ button to view the photo.
- The photo playback screen appears and the selected photo is displayed.
- Use the ⏮/⏭ buttons or push the joystick left/right to switch to the previous/next photo.
- Press the DISP. button to hide/show the onscreen displays.
- Press the ■ button to return to the [Photos] index screen.

IMPORTANT

- Observe the following precautions while either of the SD card access indicators is illuminated or flashing in red. Failure to do so may result in permanent data loss.
  - Do not disconnect the power source or turn off the camcorder.
  - Do not open the SD card compartment cover and do not remove the SD cards.

NOTES

- The following photos may not be displayed correctly.
  - Photos not recorded with this camcorder.
  - Photos created or edited on a computer.
  - Photos whose file names have been changed.

Downloaded From camera-usermanual.com Canon Manuals

Photo Operations

You can use the photo menu to copy a photo, delete a photo, or copy a custom picture file embedded in a photo. You can display the photo menu from the [Photos] index screen or photo playback screen.

Operating modes: CAMERA MEDIA | AVCHD MP4

Copying Photos

You can copy photos from one SD card to the other.

Copying a Photo from the Playback Screen

1 Display the photo to be copied (📖 164).
2 Press the joystick to open the photo menu.
3 Select [Copy] and then press the joystick.
4 Select [OK] and then press the joystick.
- Select [Cancel] instead to cancel the operation.
- The selected photo is copied.

5 When the confirmation message appears, press the joystick.

Copying a Photo from the Index Screen

1 Open the [Photos] index screen (📖 164).
2 Move the orange selection frame to the photo to be copied.
3 Press the joystick to open the photo menu.
4 Select [Copy] and then press the joystick.
5 Select [OK] and then press the joystick.
- Select [Cancel] instead to cancel the operation.
- The selected photo is copied.

6 When the confirmation message appears, press the joystick.

Copying Multiple Photos

[Other Functions] > [Photos] > [Copy]

1 Open the [Copy] submenu.
[Other Functions] > [Photos] > [Copy]
2 Select [Select] to select which photos to copy or [All] to copy all the photos and then press the joystick.
- If you selected [Select], use the joystick to move between the photos. Press the joystick to select a photo to copy and repeat as necessary (up to 100 photos). After selecting all the desired photos, press the MENU button.

3 Select [OK] and then press the joystick.
- Select [Cancel] instead to return to the photo selection screen.
- While the photos are being copied, you can press the joystick to cancel.

4 When the confirmation message appears, press the joystick.

Downloaded From camera-usermanual.com Canon Manuals

Deleting Photos

You can delete a photo you no longer need. When you do so, however, the custom picture file embedded in it will also be deleted. Photos can be deleted one at a time from the photo playback screen or [Photos] index screen.

Deleting a Photo from the Playback Screen

1 Display the photo to be deleted (📖 164).

2 Press the joystick to open the photo menu.

3 Select [Delete] and then press the joystick.

4 Select [OK] and then press the joystick.

- Select [Cancel] instead to cancel the operation.
- The selected photo is deleted.
- If a custom picture file is embedded in the photo, it is also deleted.

5 When the confirmation message appears, press the joystick.

Deleting a Photo from the Index Screen

1 Open the [Photos] Index Screen (📖 164).

2 Move the orange selection frame to the photo to be deleted.

3 Press the joystick to open the photo menu.

4 Select [Delete] and then press the joystick.

5 Select [OK] and then press the joystick.

- Select [Cancel] instead to cancel the operation.
- The selected photo is deleted.
- If a custom picture file is embedded in the photo, it is also deleted.

6 When the confirmation message appears, press the joystick.

Deleting Multiple Photos

[Other Functions]

[Photos]

[Delete]

1 Open the [Delete] submenu.
[Other Functions] ▶ [Photos] ▶ [Delete]

2 Select [Select] to select which photos to delete or [All] to delete all the photos and then press the joystick.

- If you selected [Select], use the joystick to move between the photos. Press the joystick to select a photo to delete and repeat as necessary (up to 100 photo). After selecting all the desired photos, press the MENU button.

3 Select [OK] and then press the joystick.

- Select [Cancel] instead to return to the photo selection screen.
- While the photos are being deleted, you can press the joystick to cancel.

4 When the confirmation message appears, press the joystick.

IMPORTANT

- Be careful when deleting photos. Deleted photos cannot be recovered.
- Photos that were protected using other devices cannot be deleted with the camcorder.

Downloaded From camera-usermanual.com Canon Manuals

Copying Custom Picture Files

You can copy to the camcorder a custom picture file embedded in a photo. Custom picture files can be copied from the photo playback screen or [Photos] index screen.

Copying a File from the Playback Screen

1 Display the photo with the custom picture file to be copied (📖 164).

2 Press the joystick to open the photo menu.

3 Select [Copy CP File] and then press the joystick.
- The [CP Data 1/3] screen appears with a file slot in the camcorder highlighted in orange.
- Alternatively, you can press the CUSTOM PICT. button.
- You can push the joystick up/down to display the [CP Data 2/3] and [CP Data 3/3] screens.

4 Push the joystick left/right to select the desired file slot and then press the joystick.

5 Select [OK] and then press the joystick.
- The custom picture file embedded in the selected photo is copied, overwriting the file in that slot.
- Select [Cancel] instead to cancel the operation.

6 When the confirmation message appears, press the joystick.

Copying a File from the Index Screen

1 Open the [Photos] Index Screen (📖 164).

2 Move the orange selection frame to the photo with the custom picture file to be copied.

3 Press the joystick to open the photo menu.

4 Select [Copy CP File] and then press the joystick.
- The [CP Data 1/3] screen appears with the orange selection frame indicating a file slot in the camcorder.
- Alternatively, you can press the CUSTOM PICT. button.
- You can push the joystick up/down to display the [CP Data 2/3] and [CP Data 3/3] screens.

5 Push the joystick left/right to select the desired file slot and then press the joystick.

6 Select [OK] and then press the joystick.
- The custom picture file embedded in the selected photo is copied, overwriting the file in that slot.
- Select [Cancel] instead to cancel the operation.

7 When the confirmation message appears, press the joystick.

ⓘ NOTES
- You cannot copy the custom picture file to a file slot with a protected file.
- By default, file slots [C7] to [C9] are protected.

Downloaded From camera-usermanual.com Canon Manuals

Downloaded From camera-usermanual.com Canon Manuals

Menu Options

For details about how to select an item, refer to *Using the Menus* (📖 28). For details about each function, see the reference page. Menu items without a reference page are explained after the tables. Setting options in boldface indicate default values. Depending on how the camcorder's functions are set, some menu items may not be available. Such menu items do not appear or appear grayed out.

To skip directly to the page of a specific menu:

[Camera Setup] menu 📖 169
[Audio Setup] menu 📖 170
[Video Setup] menu 📖 170
[OLED/VF Setup] menu 📖 171
[00:00 TC/UB Setup] menu 📖 173
[Other Functions] menu 📖 173
[My Menu] customized menu 📖 175

[Camera Setup] menu (CAMERA mode only)

Menu item	Submenu	Setting options	📖
[Light Metering]		[Backlight], **[Standard]**, [Spotlight]	67
[AE Shift]		[+2.0], [+1.75], [+1.5], [+1.25], [+1.0], [+0.75], [+0.5], [+0.25], **[±0]**, [-0.25], [-0.5], [-0.75], [-1.0], [-1.25], [-1.5], [-1.75], [-2.0]	66
[ISO/Gain]	[Select]	**[ISO]**, [Gain]	60
	[Extended Range]	[On], **[Off]**	
	[ISO Increment]	[1 stop], **[1/3 stop]**	
	[Gain]	**[Normal]**, [Fine]	
[Iris]	[Mode]**	[Automatic], **[Manual]**	63
	[Iris Increment]	[1/2 stop], **[1/3 stop]**, [Fine]	
	[Zoom-Iris Correct.]	**[On]**, [Off]	
[Shutter]	[Mode]	**[Speed]**, [Angle], [Clear Scan], [Slow], [Off]	57
	[Shutter Increment]	[1/3 stop], **[1/4 stop]**	
[AF]	[Mode]*	**[One Shot]**, [Continuous]	71
	[Face AF]**	[Face Priority], [Face Only], **[Off]**	76
[Flicker Reduction]		[Automatic], **[Off]**	59
[CINEMA Locked]		[On], **[Off]**	53
[EF-S Lens]		[On], **[Off]**	32
[ABB]		**[Cancel]**, [OK]	45
[Color Bars]	[Enable]	[On], **[Off]**	91
	[Type]	For 59.94 Hz recordings: **[SMPTE]**, [ARIB] For 50.00 Hz recordings: **[EBU]**, [SMPTE]	
[Periph. Illum. Corr.]		[On], **[Off]**	32

* Available when an EF lens (except manual focus lenses) is attached to the camcorder.
** When using a compatible EF lens (📖 65).

Downloaded From camera-usermanual.com Canon Manuals

[♪)) Audio Setup] menu

Menu item	Submenu	Setting options	🕮
[Audio Input]	[XLR Rec Channel]	**[CH1]**, [CH1/CH2]	88
	[XLR1 Mic Trimming]	[+12 dB], [+6 dB], **[0 dB]**, [-6 dB], [-12 dB]	90
	[XLR1 Mic Att.]	[On], **[Off]**	90
	[XLR2 Mic Trimming]	[+12 dB], [+6 dB], **[0 dB]**, [-6 dB], [-12 dB]	90
	[XLR2 Mic Att.]	[On], **[Off]**	90
	[XLR ALC Link]	[Linked], **[Separated]**	89
	[XLR Limiter]	[On], **[Off]**	89
	[MIC Mode]	**[Automatic]**, [Manual]	85
	[MIC Level]	0 to 99 **(50)**	85
	[MIC Att.]	[On], **[Off]**	87
	[MIC Low Cut]	[On], **[Off]**	86
	[Int. Mic Att.]	[On], **[Off]**	87
	[Int. Mic Low Cut]	**[Off]**, [LC1], [LC2]	86
	[Int. Mic Sensitivity]	**[Normal]**, [High]	86
	[1 kHz Tone]	[-12 dB], [-18 dB], [-20 dB], **[Off]**	91
[Audio Output]*	[Monitor Delay]	[Line Out], **[Normal]**	141
	[Monitor Channels]	**[CH1/CH2]**, [CH1/CH1], [CH2/CH2], [CH1+2/CH1+2]	141
	[Level]	**[1 Vrms]**, [2 Vrms]	142
	[Headphone Volume]	[Off], 1 to 15 **(8)**	90, 129
	[Speaker Volume]	[Off], 1 to 15 **(8)**	129

* In MEDIA mode, not available in some index screens and playback modes.

[Video Setup] menu

Menu item	Submenu	Setting options	🕮
[HDMI]	[Output]	For 59.94 Hz recordings: **[Normal]**, [+1920x1080 59.94P] For 50.00 Hz recordings: **[Normal]**, [+1920x1080 50.00P]	137
	[LUT]		
	[Setting]	[On], **[Off]**	138
	[Select]	[Wide DR], **[BT. 709]**	
	[Rec Command]	[On], **[Off]**	48
	[Time Code]	[On], **[Off]**	–
[HD Onscreen Displays]		[On], **[Off]**	139
[SD Onscreen Displays]		[On], **[Off]**	139
[SD Output]		[Letterbox], **[Squeeze]**, [Side Crop]	139

[Time Code] (CAMERA mode only) : Allows you to output the time code signal from the HDMI OUT terminal.

Downloaded From camera-usermanual.com Canon Manuals

[OLED/VF Setup] menu

Menu item	Submenu		Setting options	🕮
[OLED Setup]	[Brightness]		-99 to 99 **(±0)**	37
	[Contrast]		-99 to 99 **(±0)**	
	[Color]		-20 to 20 **(±0)**	
	[Sharpness]		1 to 4 **(2)**	
	[Luminance]		[On], **[Off]**	
	[Color Balance]			
		[R-B Simult. Adjust.]	-25 to 25 **(±0)**	
		[R Fine Tuning]	-25 to 25 **(±0)**	
		[B Fine Tuning]	-25 to 25 **(±0)**	
[Viewfinder Setup]	[Brightness]		-99 to 99 **(±0)**	37
	[Contrast]		-99 to 99 **(±0)**	
	[Color]		-20 to 20 **(±0)**	
	[Sharpness]		1 to 4 **(2)**	
	[Backlight]		**[Normal]**, [Bright]	
[OLED Mirror Image]			[On], **[Off]**	37
[OLED/VF B&W]			[On], **[Off]**	37
[View Assist.]			[On], **[Off]**	53
[Peaking]	[Setting]		[On], **[Off]**	72
	[Select]		**[Peaking 1]**, [Peaking 2]	
	[Peaking 1]			
		[Color]	**[White]**, [Red], [Yellow], [Blue]	
		[Gain]	[Off], 1 to 15 **(8)**	
		[Frequency]	1 to 4 **(2)**	
	[Peaking 2]			
		[Color]	[White], **[Red]**, [Yellow], [Blue]	
		[Gain]	[Off], 1 to 15 **(15)**	
		[Frequency]	1 to 4 **(1)**	
[Zebra]	[Setting]		[On], **[Off]**	79
	[Select]		**[Zebra 1]**, [Zebra 2], [Zebra 1&2]	
	[Zebra 1 Level]		**[70 ±5%]**, [75 ±5%], [80 ±5%], [85 ±5%], [90 ±5%], [95 ±5%]	
	[Zebra 2 Level]		[70%], [75%], [80%], [85%], [90%], [95%], **[100%]**	
	[HD Output]		[On], **[Off]**	
[Markers]	[Enable]		[On], **[Off]**	78
	[Center]		[Black], [Gray], **[Off]**	
	[Horizontal]		[Black], [Gray], **[Off]**	
	[Grid]		[Black], [Gray], **[Off]**	
	[Safe Area]		[Black], [Gray], **[Off]**	
	[Safe Area Setting]		[80%], [90%], [92.5%], **[95%]**	
	[Aspect Marker]		[Black], [Gray], **[Off]**	
	[Aspect Ratio]		[4:3], [13:9], [14:9], [1.66:1], [1.75:1], [1.85:1], **[2.35:1]**	
[Audio Level]*			**[On]**, [Off]	–
[Display Date/Time]*			[On], **[Off]**	–

Downloaded From camera-usermanual.com Canon Manuals

Menu item	Submenu	Setting options	📖
[Custom Display 1]	[Light Metering]	**[On]**, [Off]	50
	[Custom Picture]	**[On]**, [Off]	
	[Focal Length]	**[On]**, [Off]	
	[ND Filter]	**[On]**, [Off]	
	[Focus Mode]	**[On]**, [Off]	
	[Key Lock]	**[On]**, [Off]	
	[White Balance]	**[On]**, [Off]	
	[Exposure]	**[On]**, [Off]	
	[Iris]	**[On]**, [Off]	
	[ISO/Gain]	**[On]**, [Off]	
	[Shutter]	**[On]**, [Off]	
	[Peaking]	**[On]**, [Off]	
	[Magnification]	**[On]**, [Off]	
	[View Assist.]	**[On]**, [Off]	
	[EF-S Lens]	**[On]**, [Off]	
	[Lens]	**[On]**, [Off]	
[Custom Display 2]	[Remaining Battery]	[Only Warnings], **[Normal]**, [Off]	50
	[Remaining Rec Time]	[Only Warnings], **[Normal]**, [Off]	
	[Recording Mode]	**[On]**, [Off]	
	[Time Code]	**[On]**, [Off]	
	[Remaining Photos]	[Only Warnings], **[Normal]**, [Off]	
	[Temperature/Fan]	**[On]**, [Off]	
	[Movie Format]	**[On]**, [Off]	
	[Bit Rate/Resolution]	**[On]**, [Off]	
	[Frame Rate]	**[On]**, [Off]	
	[Output Display]	[On], **[Off]**	
	[Rec Command]	**[On]**, [Off]	
	[User Bit]	**[On]**, [Off]	
	[Monitor Channels]	**[On]**, [Off]	
	[Audio Level]	**[On]**, [Off]	
	[Network Functions]	**[On]**, [Off]	
	[GPS]	**[On]**, [Off]	
	[Date/Time]	[Date/Time], [Time], [Date], **[Off]**	

* In MEDIA mode, not available in some index screens and playback modes.

[Audio Level] (MEDIA mode only) : Displays the audio level meter when set to [On].

[Display Date/Time] (MEDIA mode only) : Displays the date and time of recording during playback.

Downloaded From camera-usermanual.com Canon Manuals

[00:00 TC/UB Setup] menu (CAMERA mode only)

Menu item	Submenu	Setting options	🕮
[Time Code]	[Mode]	**[Preset]**, [Regen.]	80
	[Run]	**[Rec Run]**, [Free Run]	
	[DF/NDF]	**[DF]**, [NDF]	81
	[Setting]	**[Set]**, [Reset]	80
[User Bit]	[Output Mode]	**[Fixed]**, [Pulldown]	83
	[Type]	**[Setting]**, [Time], [Date]	83

[Other Functions] menu

Menu item	Submenu		Setting options	🕮
[Reset]	[All Settings]		**[Cancel]**, [OK]	–
	[Camera Settings]		**[Cancel]**, [OK]	
	[Assignable Buttons][1]		**[Cancel]**, [OK]	
[Transfer Menu/CP]	[Save To SD]	[SD A]	[Menu], [Menu+CP]	123
		[SD B]		
	[Load From SD]	[SD A]	[Menu], [Menu+CP]	
		[SD B]		
[Time Zone]			List of world time zones. **[UTC-05:00 New York]** or **[UTC+01:00 Central Europe]**[2]	26
[Set Clock]	[Date/Time]		–	26
	[Date Format]		[YMD], [YMD/24H], **[MDY]**, [MDY/24H], **[DMY]**, [DMY/24H][2]	
[WFM (OLED)][1]	[Setting]		[WFM], [VS], [Edge Mon.], **[Off]**	92
	[Waveform Monitor]			92
		[Type]	**[Line]**, [Line+Spot], [Field], [RGB], [YPbPr]	
		[Gain]	**[1x]**, [2x]	
	[Vectorscope]			93
		[Type]	[Spot], **[Normal]**	
		[Gain]	**[1x]**, [5x]	
	[Edge Monitor]			93
		[Type]	**[Type 1]**, [Type 2]	
		[Gain]	[Off], 1 to 15 **(12)**	
[Language 言語]			[Deutsch], **[English]**, [Español], [Français], [Italiano], [Polski], [Português], [Русский], [简体中文], [한국어], [日本語]	27
[REMOTE Term.]			[RC-V100], **[Standard]**	105
[Assignable Buttons]	[1] to [17]		See footnote 3	107
[Tally Lamp]	[Front]		**[On]**, [Off]	–
	[Rear]			
[Media Access LED]			**[On]**, [Off]	–
[Fan]			**[Low]**, [High], [Automatic]	52
[System Frequency][1]			**[59.94 Hz]**, **[50.00 Hz]**[2]	54
[Movie Format]			**[AVCHD]**, [MP4]	54

Downloaded From camera-usermanual.com Canon Manuals

Menu item	Submenu	Setting options	🕮
[AVCHD]	[Bit Rate]	[28 Mbps LPCM], [28 Mbps], **[24 Mbps LPCM]**, [24 Mbps], [17 Mbps], [7 Mbps]	54
	[Frame Rate][4]	For 59.94 Hz recordings: **[59.94i]**[2], [PF29.97], [23.98P] For 50.00 Hz recordings: **[50.00i]**[2], [PF25.00]	55
[MP4]	[Bit Rate/Resolution]	[35 Mbps 1920x1080], **[24 Mbps 1920x1080]**, [17 Mbps 1920x1080], [4 Mbps 1280x720], [3 Mbps 640x360]	54
	[Frame Rate][4]	For 59.94 Hz recordings: **[29.97P]**, [23.98P] For 50.00 Hz recordings: Cannot be selected	55
[Relay Recording]		**[On]**, [Off]	43
[Double Slot Recording]		[On], [MP4 (4 Mbps)], [MP4 (3 Mbps)], **[Off]**	43
[Continuous Rec]	[Mode]	[On], **[Off]**	98
	[Start/Stop]	[Start], **[Stop]**	
[Special Recording]	[Pre-recording]	[On], **[Off]**	96
	[Slow & Fast Motion]	For 59.94 Hz recordings: [29.97P], [23.98P], **[Off]** (when the frame rate is 59.94P) [59.94P], [23.98P], **[Off]** (when the frame rate is 29.97P) [59.94P], [29.97P], **[Off]** (when the frame rate is 23.98P) For 50.00 Hz recordings: [On], **[Off]**	96
[Review Recording]		**[Entire Clip]**, [Last 4 sec]	94
[Delete Last Clip]		**[Cancel]**, [OK]	–
[Clips]	[Copy]	[Select], [All]	131
	[Delete]	[Select], [All]	132
	[Convert to MP4]	[Select], [All]	133
	[FTP Transfer]	[Select], [All]	158
[Delete Shot][1]		[Select], [All]	132
[File Numbering][1]		[Reset], **[Continuous]**	95
[Photos]	[Copy]	[Select], [All]	165
	[Delete]	[Select], [All]	166
	[FTP Transfer]	[Select], [All]	158
	[Add CP File]	**[On]**, [Off]	110
[Custom Function]	[Shockless WB]	[On], **[Off]**	121
	[AE Response]	[High], **[Normal]**, [Slow]	
	[Grip Ctrl Dial Dir.]	[Reverse], **[Normal]**	
	[Retract Lens]	**[On]**, [Off]	
	[Focus Assistance B&W]	[Both], [Magnify], [Peaking], **[Off]**	
	[Magn. Add. Disp.]	[Peaking], [Edge Monitor], **[Off]**	
	[Scan Reverse Rec]	[Both], [Vertical], [Horizontal], **[Off]**	
	[🔒 START/STOP]	[On], **[Off]**	
[Reset Hour Meter]		**[Cancel]**, [OK]	–
[Browser Remote]		[On], **[Off]**	153
[Playback via Browser][1]		–	161

Downloaded From camera-usermanual.com Canon Manuals

Menu item	Submenu		Setting options	🕮
[Network Settings]	[Connection Settings]			
		[Set Up New]	[Infrastructure], [Camera Access Point]	146, 149
		[Select]	**[No.1]** to [No.5]	151
		[Edit]	**[Settings]**, [Rename]	152
	[Remote Settings]		–	153
	[FTP Server Settings]		–	158
	[FTP Transfer Settings]			
		[Create Folder by Date]	**[On]**, [Off]	
		[Same Named Files]	**[Skip]**, [Overwrite]	
[GPS Auto Time]			[On], **[Off]**	103
[Initialize Media]	[SD A]		**[Complete]**, [Quick]	42
	[SD B]			
[Certification Logos]			–	–
[Lens Firmware]			–	33
[Firmware]			–	–

[1] In MEDIA mode, not available in some index screens and playback modes.
[2] The default value depends on the country/region or purchase.
[3] Setting options for [Assignable Buttons]: [(NONE)], [ONE-SHOT AF], [AF LOCK], [Face AF], [PUSH AUTO IRIS], [Iris Mode], [Iris +], [Iris -], [AE Shift +], [AE Shift -], [Backlight], [Spotlight], [ISO/GAIN], [SHUTTER], [View Assist.], [HDMI LUT], [PEAKING], [ZEBRA], [WFM], [MAGN.], [DISP.], [Color Bars], [Markers], [OLED Setup], [Viewfinder Setup], [OLED/VF B&W], [Onscreen Display], [Time Code], [Time Code Hold], [Headphone +], [Headphone -], [Speaker +], [Speaker -], [Monitor Channels], [Audio Level], [Photo], [My Menu], [Initialize Media], [✣ Up], [✣ Down], [✣ Left], [✣ Right], [✣ SET], [STATUS], [WB SET], [WB], [CUSTOM PICTURE], [User Setting (NONE)].
The default settings are as follows. [1] to [6]: [(NONE)], [7] and [8]: [MAGN.], [9]: [PEAKING], [10]: [ZEBRA], [11]: [AF LOCK], [12]: [PUSH AUTO IRIS], [13]: [ISO/GAIN], [14]: [SHUTTER], [15]: [ONE-SHOT AF], [16]: [WFM], [17]: [DISP.]
[4] Depending on the video configuration, the frame rate may be set automatically. See the function description for details.

[Reset]: Reset various camcorder settings.

[All Settings]: Resets all the camcorder's settings to default settings, except for the hour meter.

[Camera Settings] (CAMERA mode only) : Resets the white balance, iris, ISO speed, gain, shutter speed, [Camera Setup] settings and custom picture settings to default settings.

[Assignable Buttons]: Resets the assignable buttons to default settings.

[Tally Lamp] (CAMERA mode only) **:** Allows you to set whether the front and rear tally lamps illuminate while the camcorder is recording.

[Media Access LED]: Allows you to set whether the respective SD card access indicator illuminates while the camcorder is accessing an SD card.

[Delete Last Clip] (CAMERA mode only) **:** Deletes the last clip you recorded. This menu option will not be available if you turned the camcorder off since recording the last clip.

[Reset Hour Meter]: The camcorder has two "hour meters" – the first keeps track of total operation time and the second keeps track of operation time since the last time the second hour meter was reset with this function.

[Firmware] (CAMERA mode only) **:** You can verify the current version of the camcorder's firmware. This menu option is usually unavailable.

[★ My Menu] (CAMERA mode only)

Menu item	Submenu	Setting options	🕮
[Edit]	[Register]	**[Cancel]**, [OK]	29
	[Move]	**[Cancel]**, [OK]	
	[Delete]	**[Cancel]**, [OK]	
	[Reset All]	**[Cancel]**, [OK]	

Downloaded From camera-usermanual.com Canon Manuals

Displaying the Status Screens

You can use the status screens to check the camcorder's various recording- and playback-related settings. You can also output the status screens on an external monitor.

Operating modes: CAMERA MEDIA | AVCHD MP4

1 Press the STATUS button.
- The status screen most recently displayed will appear unless you turned off the camcorder or changed the operating mode. In such case, the [Camera 1/2] status screen appears in CAMERA mode and the [Assignable Buttons 1/2] status screen appears in MEDIA mode.

2 Push the joystick up/down to scroll through the status screens.

3 When you are finished, press the STATUS button again to exit the status screens.
- Alternatively, you can press the MENU or CUSTOM PICT. button. Doing so will exit the status screen and open the respective menu.

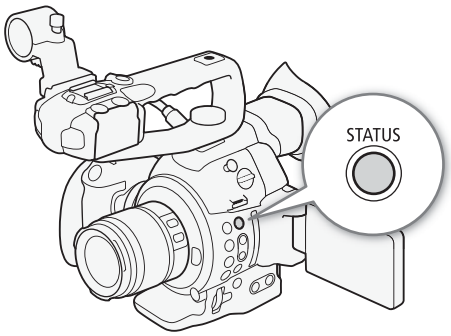

Status screen	Description	CAMERA	MEDIA	🕮
[Camera 1/2], [Camera 2/2]	Displays settings related to recording, such as ISO speed/gain, iris and shutter speed increments, peripheral illumination correction and attached lens model information.	●	–	177
[Assignable Buttons 1/2], [Assignable Buttons 2/2]	Allows you to verify the current function of each assignable button.	●	●	177
[Audio]	Displays settings related to audio.	●	●[1]	178
[Media]	Displays information about the SD cards.	●	●	178
[Video]	Displays the settings for the video terminals and whether a special recording mode is in effect.	●	●	179
[Battery/Hour Meter]	Allows you to check the remaining battery time, battery life and how long the camcorder has been in operation.	●	●	179
[CP Data 1/3], [CP Data 2/3], [CP Data 3/3][2]	Displays the settings for the custom picture file that is in effect.	●	–	180, 181
[Network Settings 1/9] to [Network Settings 9/9]	Displays various settings related to the camcorder's Wi-Fi functions.	●	●	181-183
[GPS Information Display][3]	Displays GPS information.	●	–	184

[1] Does not appear in the [Photos] index screen.
[2] These screens appear only after a custom picture file has been selected.
[3] This screen appears only when an optional GP-E2 GPS Receiver is connected to the camcorder.

Downloaded From camera-usermanual.com Canon Manuals

[Camera 1/2], [Camera 2/2] Status Screens (CAMERA mode only)

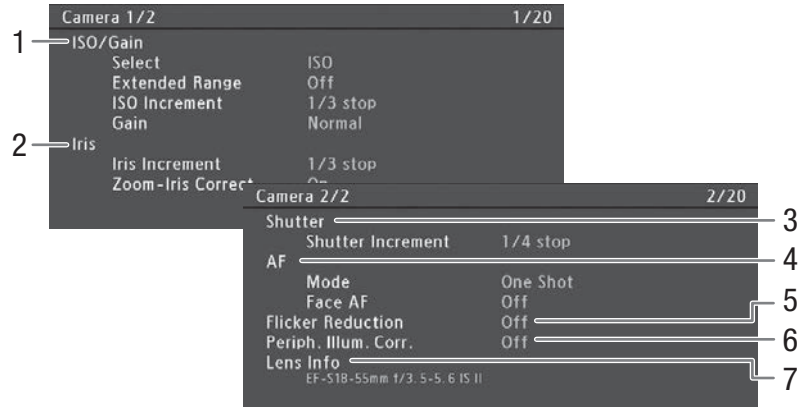

1 ISO speed/Gain (📖 60)
2 Aperture (📖 63)
3 Shutter increment (📖 58)
4 Autofocus (📖 71)
5 Flicker reduction (📖 59)
6 Peripheral illumination correction (📖 32)
7 Information on attached lens

[Assignable Buttons 1/2], [Assignable Buttons 2/2] Status Screen

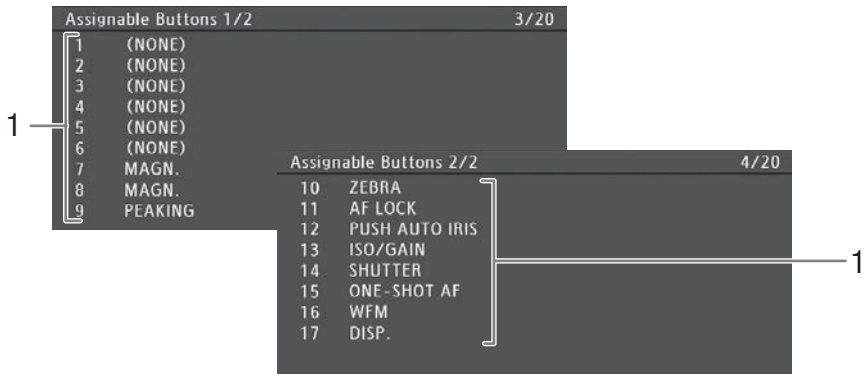

1 Assignable buttons 1 to 17* (📖 107)

* Assignable buttons 1 to 6 do not appear in MEDIA mode.

Downloaded From camera-usermanual.com Canon Manuals

[Audio] Status Screen

In CAMERA **mode**

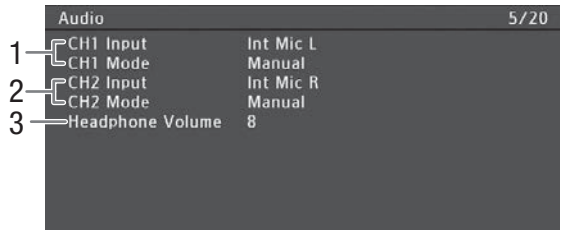

In MEDIA **mode**

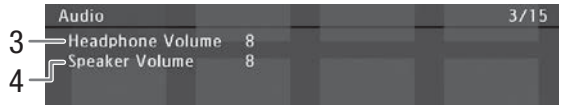

1 Input and audio recording level mode for CH1 (📖 85)
2 Input and audio recording level mode for CH2 (📖 85)
3 Headphone volume (📖 129)
4 Speaker volume (📖 129)

[Media] Status Screen

In CAMERA **mode**

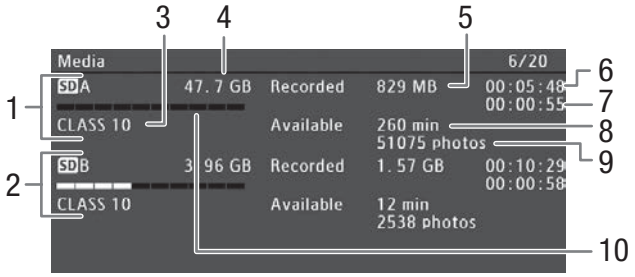

1 SD card A
2 SD card B
3 SD speed class (📖 40)
4 Total space on the card
5 Used space on the card
6 Clip recording time* (📖 98)
7 Total shot recording time* (📖 98)
8 Available recording time on the card**
9 Available number of photos on the card
10 Approximate used space on the card

* This information appears only during continuous recording mode.
**This information does not appear in MEDIA mode.

NOTES

- Depending on the card used, the total space displayed on the screen may differ from the nominal capacity listed on the SD card.
- In MEDIA mode and when both relay recording and double slot recording mode are turned off in CAMERA mode, only the information about the SD card currently selected for recording/playback will be displayed.

Downloaded From camera-usermanual.com Canon Manuals

[Video] Status Screen

In CAMERA mode

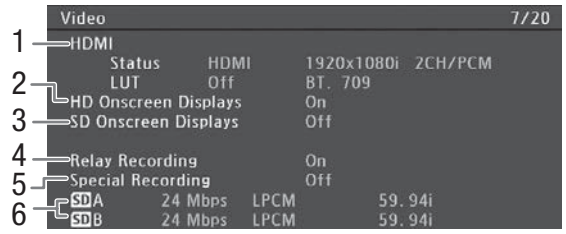

In MEDIA mode

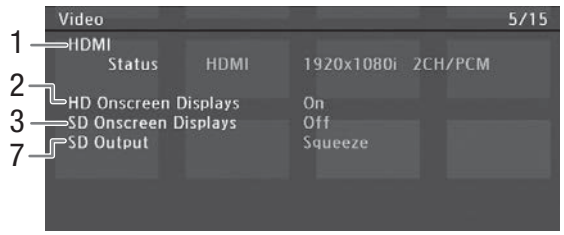

1 HDMI output and LUT status (📖 138)
2 Onscreen displays superimposed on HD output (📖 139)
3 Onscreen displays superimposed on SD output (📖 139)
4 Relay recording (📖 43)
5 Special recording (📖 96)
6 Bit rate and frame rate (📖 54)
7 SD output setting (📖 139)

* Also shows LPCM recording (for AVCHD clips, if applicable) or the resolution (for MP4 clips).

[Battery/Hour Meter] Status Screen

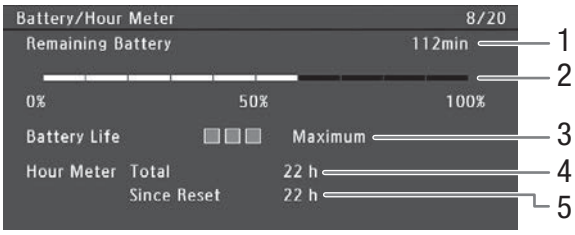

1 Remaining recording time*
2 Remaining recording time indicator*
3 Battery life indicator*
4 Total operation time (📖 175)
5 Operation time since using [Reset Hour Meter] (📖 175)

* Only for battery packs bearing the Intelligent System mark.

Downloaded From camera-usermanual.com Canon Manuals

[CP Data 1/3] Status Screen (CAMERA mode only)

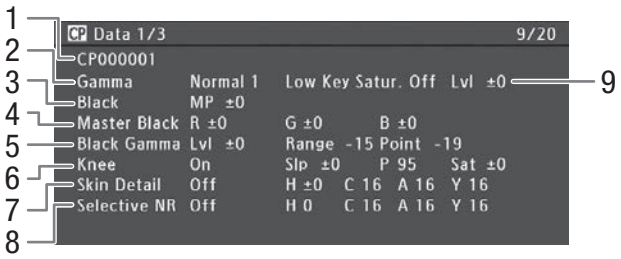

1 Custom picture file name (📖 110)
2 Gamma (📖 114)
3 Master pedestal (📖 115)
4 Master black RGB levels (📖 115)
5 Black gamma settings (level, range and point) (📖 115)
6 Knee settings (slope, point and saturation) (📖 116)
7 Skin detail settings (hue, chroma, area and Y level) (📖 117)
8 Selective NR settings (hue, chroma, area and Y level) (📖 117)
9 Low key saturation (📖 115)

[CP Data 2/3] Status Screen (CAMERA mode only)

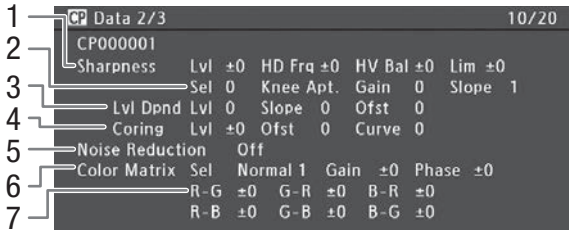

1 Sharpness settings (level, horizontal detail frequency, horizontal/vertical detail balance, and limit) (📖 116)
2 Sharpness settings (select, knee aperture gain and slope) (📖 116)
3 Level depend settings (level, slope and offset) (📖 117)
4 Coring settings (level, offset and curve) (📖 116)
5 Noise reduction (📖 117)
6 Color matrix settings (select, gain and phase) (📖 117)
7 Color matrix settings (📖 117)

Downloaded From camera-usermanual.com Canon Manuals

[CP Data 3/3] Status Screen (CAMERA mode only)

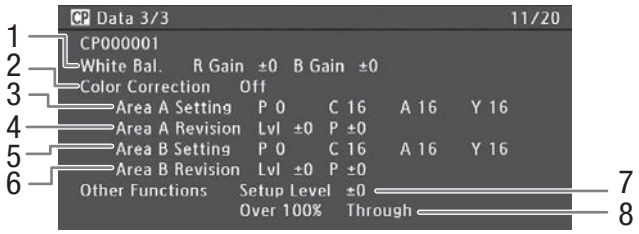

1 White balance R/B gain (📖 118)
2 Color correction (📖 118)
3 Area A settings (phase, chroma, area and Y level) (📖 118)
4 Area A revision settings (level and phase) (📖 118)
5 Area B settings (phase, chroma, area and Y level) (📖 118)
6 Area B revision settings (level and phase) (📖 118)
7 Setup level (📖 118)
8 Clip exceeding 100% (📖 118)

[Network Settings 1/9] Status Screen

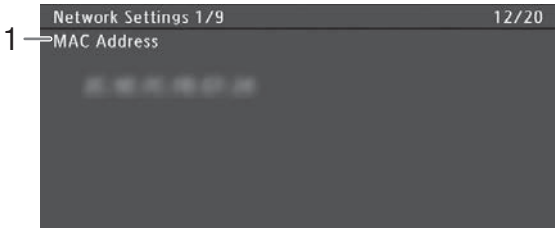

1 Camcorder's MAC address

Downloaded From camera-usermanual.com Canon Manuals

[Network Settings 2/9], [Network Settings 3/9] Status Screens

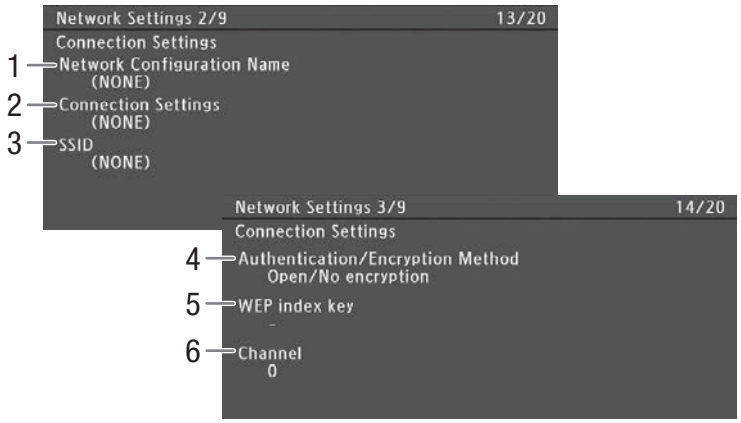

Connection settings of the current network connection (📖 145)

1 Network configuration name (📖 151)
2 Connection type
3 SSID (network name)
4 Authentication and encryption method
5 WEP index key
6 Wi-Fi channel

[Network Settings 4/9], [Network Settings 5/9] Status Screens

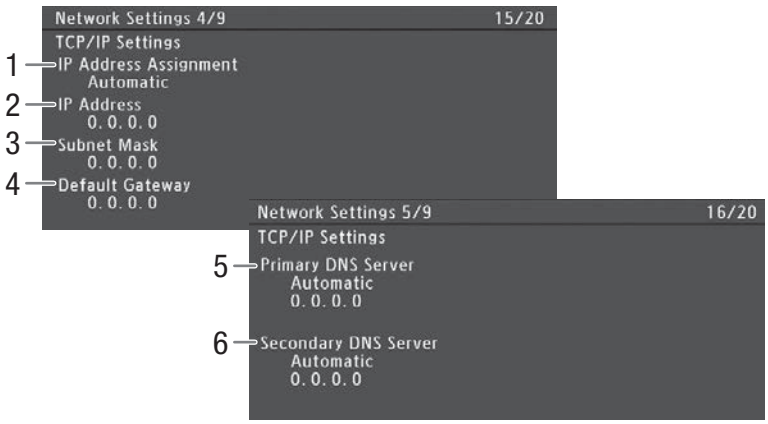

TCP/IP settings of the current network connection (📖 150)

1 IP address assignment method
2 IP address
3 Subnet mask
4 Default gateway
5 Primary DNS server (assignment method/IP address)
6 Secondary DNS server (assignment method/IP address)

Downloaded From camera-usermanual.com Canon Manuals

[Network Settings 6/9] Status Screen

Browser Remote settings (📖 153)

1 Port number

2 Camcorder ID

[Network Settings 7/9], [Network Settings 8/9], [Network Settings 9/9] Status Screens

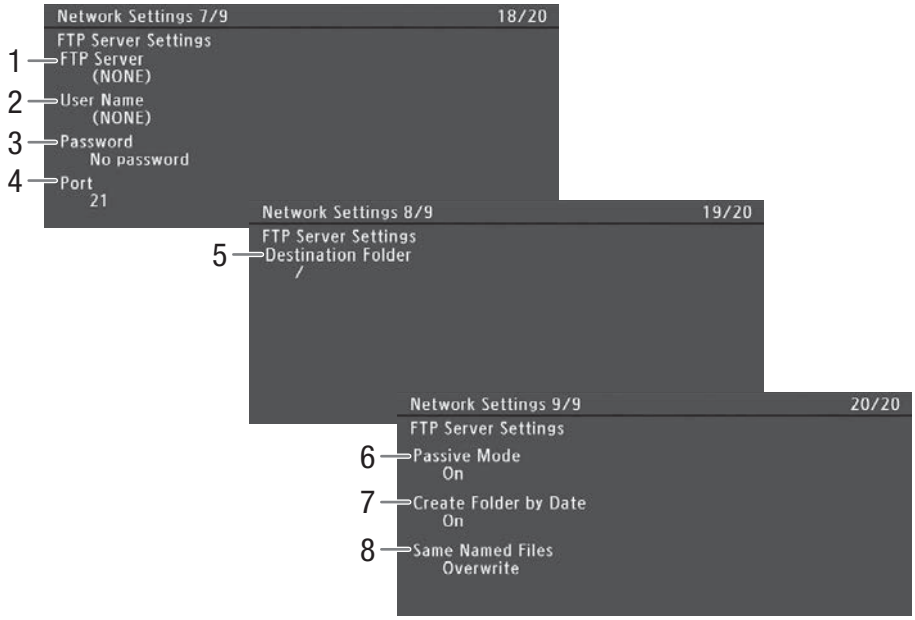

FTP server settings (📖 158)

1 FTP server (host) name

2 User name

3 Password protection*

4 Port number

5 Destination folder on the FTP server

6 Passive mode

7 Create new folders by transfer date

8 Handling of same-named files

* The password itself will not be displayed.

Downloaded From camera-usermanual.com Canon Manuals

[GPS Information Display] Status Screen (CAMERA mode only)

GPS information (📖 103)

1 Latitude
2 Longitude
3 Elevation
4 UTC (coordinated universal time) date and time
5 Satellite signal strength

Downloaded From camera-usermanual.com Canon Manuals

Troubleshooting

If you have a problem with your camcorder, refer to this section. Consult your dealer or a Canon Service Center if the problem persists.

Power source

The camcorder will not turn on or it turns off by itself.
- The battery pack is exhausted. Replace or charge the battery pack.
- Remove the battery pack and reattach it correctly.

Shortly after turning it on, the camcorder turns off on its own.
- You are using a battery pack that is not compatible for use with this camcorder. Use a recommended battery pack (📖 200).

Cannot charge the battery pack.
- The temperature of the battery pack is outside the charging range. If the battery pack's temperature is below 0 °C (32 °F), warm it before charging it; if it is above 40 °C (104 °F), let the battery pack cool down before charging it.
- Charge the battery pack in temperatures between 0 °C and 40 °C (32 °F and 104 °F).
- The battery pack is faulty. Replace the battery pack.

The battery pack is exhausted extremely quickly even at normal temperatures.
- Check the [Battery/Hour Meter] status screen (📖 179) to see whether the battery pack is at the end of its service life. If so, buy a new battery pack.

Recording

The camcorder's controls are not responsive/disabled.
- The grip unit's plug may not be correctly connected to the camcorder. When attaching the grip unit to the camcorder, make sure the grip unit's plug is firmly inserted all the way into the connection terminal on the camcorder (📖 35). If you changed the angle of the grip unit, make sure you did not partially disconnect the plug by mistake.
- When the POWER switch is set to 🔒, all buttons except for the START/STOP button are locked and cannot be operated. (Depending on the [Other Functions] ❯ [Custom Function] ❯ [🔒 START/STOP] setting, the START/STOP button may be locked as well.) Set the POWER switch to CAMERA.

Pressing the START/STOP button will not start recording.
- The START/STOP lock lever on the handle unit is set to 🔒, rendering the handle unit's START/STOP button inoperable. Change the position of the lock lever.
- When using the optional RC-V100 Remote Controller, you may not be able to start or stop recording. Stop using the remote controller and then press the START/STOP button.

The point where the START/STOP button was pressed does not match the beginning/end of the recording.
- There is a slight interval between pressing the START/STOP button and the actual start/end of recording. This is not a malfunction.

The camcorder will not focus.
- The camcorder may not be able to focus on certain subjects using autofocus. Focus manually (📖 71).
- The viewfinder is not adjusted. Use the dioptric adjustment lever to make the proper adjustment (📖 36).
- The lens is dirty. Clean the lens with a soft lens-cleaning cloth.

When a subject flits across in front of the lens, the image appears slightly bent.
- This is a phenomenon typical of CMOS image sensors. When a subject crosses very quickly in front of the camcorder, the image may seem slightly warped. This is not a malfunction.

Bright red, green or blue dots appear on the screen.
- The camcorder's CMOS sensor is a delicate piece of precision engineering. Direct exposure of the sensor to ion rays or other types of cosmic radiation may affect it and this may rarely appear as bright colored dots on the screen. This is the nature of CMOS image sensors and does not represent a malfunction. Adjusting the black balance (📖 45) may help solve the problem.
- The effects of the damage may be more noticeable when the camcorder is used in places subject to high temperatures, when a high ISO speed or gain level is used and when slow shutter speeds are used.

Abnormal images appear on the screen and the camcorder cannot record properly.
- While recording using an almost empty battery pack together with the compact power adapter, the compact power adapter was inadvertently disconnected or the power supply was suddenly interrupted. Reconnect the compact power adapter and turn the camcorder off and then on again or replace the battery pack with a fully charged one.

Downloaded From camera-usermanual.com Canon Manuals

Changing between recording (● REC) and record pause (STBY) takes longer than usual.
- When the SD card contains a large number of clips, some operations may take longer than usual. Save your clips (📖 143) and initialize the SD card (📖 42). Alternatively, replace the SD card.

The camcorder cannot record to an SD card properly.
- This may occur as recordings are made and deleted over time. Save your clips (📖 143) and initialize the SD card (📖 42).

After using the camcorder for a long time, it becomes hot.
- The camcorder may become hot after using it continuously for long periods of time; this is not a malfunction. If the camcorder becomes unusually hot or it becomes hot after using it only for a short while, it may indicate a problem with the camcorder. Consult a Canon Service Center.

Playback

Cannot delete clips or photos.
- Clips and photos that were protected using other devices cannot be deleted with the camcorder.
- The LOCK switch on the SD card is set to prevent accidental erasure. Change the position of the LOCK switch.

Deleting clips takes longer than usual.
- When the SD card contains a large number of clips, some operations may take longer than usual. Save your clips (📖 143) and initialize the SD card (📖 42).

Cannot copy clips.
- There is not enough available space on the SD card being copied to or the SD card already contains the maximum number of AVCHD clips (3,999 clips). Delete some clips (📖 132) to free some space or replace the SD card.

Cannot select clips or photos.
- You cannot select more than 100 individual clips or photos. Use the [All] option instead of [Select].

Indicators and Onscreen Displays

appears in red on the screen.
- Battery pack is exhausted. Replace or charge the battery pack.

appears on the screen.
- The camcorder cannot communicate with the battery pack attached so the remaining battery time cannot be displayed.

The tally lamps do not illuminate.
- Set [Other Functions] ▶ [Tally Lamp] ▶ [Front] or [Rear] to [On].

The tally lamps flash quickly. (4 flashes per second)
- The battery pack is exhausted. Replace or charge the battery pack.
- There is not enough available space on both SD cards. Delete some clips (📖 132) to free some space or replace the SD card.
- A system error has occurred. Turn off the camcorder and back on again. If this does not solve the problem, consult a Canon Service Center.

The tally lamps flash slowly. (1 flash per second)
- The combined available space on both SD cards is low. Replace the SD card.

appears in red on the screen.
- An SD card error occurred. Remove and reinsert the SD card. If the display does not change back to normal, save your clips (📖 143) and photos and initialize the SD card (📖 42).

Even after stopping recording, the SD card access indicator stays illuminated in red.
- The clip is being recorded. This is not a malfunction.

keeps flashing on the screen.
- You connected the optional GP-E2 GPS Receiver to the camcorder's USB terminal in MEDIA mode. Disconnect the GP-E2 and connect in again after setting the camcorder in CAMERA mode.

appears in yellow on the screen.
- The camcorder's internal temperature has reached a predetermined level. You can continue using the camera.

Downloaded From camera-usermanual.com Canon Manuals

appears in red on the screen.
- In CAMERA mode, when [Other Functions] ➤ [Fan] is set to [Automatic], the cooling fan will start automatically (FAN appears on the screen).

LENS appears on the screen.
- The camcorder and lens cannot communicate normally. Clean the lens's contacts and reattach the lens.

Picture and Sound

The OLED screen is too dark.
- Adjust the brightness with the [OLED/VF Setup] ➤ [OLED Setup] ➤ [Brightness] setting. To make the screen brighter temporarily, set [OLED/VF Setup] ➤ [OLED Setup] ➤ [Luminance] to [On].

Screen displays turn on and off repeatedly.
- The battery pack is exhausted. Replace or charge the battery pack.
- Remove the battery pack and reattach it correctly.

Abnormal characters appear on the screen and the camcorder does not operate properly.
- Disconnect the power source and reconnect it after a short time. If the problem still persists, use the [Other Functions] ➤ [Reset] ➤ [All Settings] function. This resets all the camcorder's settings to default values except for the hour meter.

Video noise appears on screen.
- Keep a distance between the camcorder and devices that emit strong electromagnetic fields such as near powerful magnets and motors, MRI machines or high-voltage power lines.

Horizontal bands appear on the screen.
- This is a phenomenon typical of CMOS image sensors when recording under some types of fluorescent, mercury or sodium lamps. This is not a malfunction. You may be able to reduce the symptoms by setting [Camera Setup] ➤ [Flicker Reduction] to [Automatic] and/or by setting the shutter speed mode to [Speed] and the shutter speed to a value matching the frequency of the local electrical system: 1/50* or 1/100 for 50 Hz systems, 1/60 or 1/120 for 60 Hz systems.
  * May not be available depending on the frame rate.

Audio cannot be recorded.
- The audio input switch is not set correctly (📖 85) or the audio recording level is not set correctly (📖 85, 89).
- An external microphone connected to the XLR terminal requires phantom power. Set the XLR terminal switch to MIC+48V (📖 88).
- The external microphone connected to the MIC terminal is not turned on or its battery is empty.

Audio is recorded at an extremely low level.
- The AUDIO LEVEL switch is set to M, and the recording level is set too low. When using the MIC terminal: [Audio Setup] ➤ [Audio Input] ➤ [MIC Mode] is set to [Manual] and the [MIC Level] setting is too low. Check the audio level meter on the screen and adjust the audio level correctly (📖 85, 89).
- The microphone attenuator is on. Turn off the microphone attenuator (📖 87, 90).

Sound is distorted or is recorded at lower levels.
- When recording near loud sounds (such as fireworks, shows or concerts), sound may become distorted or it may not be recorded at the actual levels. Activate the microphone attenuator (📖 87, 90), or adjust the audio recording level manually (📖 85, 89).

The picture is displayed correctly but there is no sound from the built-in speaker.
- Speaker volume is turned off. Adjust the volume (📖 129).
- If headphones are connected to the camcorder, disconnect them.

SD Cards and Accessories

Cannot insert the SD card.
- The SD card you are trying to insert is not facing the correct direction. Turn it over and insert it.

Recording to and playing back from an SD card is slow.
- This may occur as clips and photos are recorded/deleted over time. Save your recordings (📖 143) and initialize the SD card (📖 42).

Downloaded From camera-usermanual.com Canon Manuals

The optional RC-V100 Remote Controller or commercially available remote control does not work.
- Make sure that the [Other Settings] ❯ [REMOTE Term.] setting is set to [RC-V100] when using the optional RC-V100 Remote Controller or [Standard] when using a commercially available remote control.
- When [Camera Setup] ❯ [CP CINEMA Locked] is set to [On], a protected custom picture file is selected, or no custom picture is selected, custom picture settings cannot be adjusted using the RC-V100. Set [CP CINEMA Locked] to [Off] or select an unprotected custom picture file ([C1] to [C6]) (📖 111).
- Turn off the camcorder, reconnect the RC-V100 or other remote control and then turn the camcorder back on again.

Connections with External Devices

Video noise appears on a nearby TV screen.
- When using the camcorder in a room where a TV is located, keep a distance between the compact power adapter and the power or antenna cables of the TV.

Playback looks fine on the camcorder but there is no image on the external monitor.
- The camcorder is not connected correctly to the external monitor. Make sure you are using the correct connection (📖 137).
- The video input on the external monitor is not set to the video terminal to which you connected the camcorder. Select the correct video input.

The camcorder is connected using a commercially available HDMI cable, but there is no picture or sound from the external monitor.
- Disconnect the HDMI cable and then restore the connection or turn the camcorder off and then on again.

The computer does not recognize the camcorder even though the camcorder is connected correctly.
- Disconnect the USB cable and turn off the camcorder. After a short while, turn it on again and restore the connection.
- Connect the camcorder to a different USB port on the computer.
- Establish a USB connection while the [AVCHD] index screen, [MP4] index screen or [Shot List] index screen is displayed.

Wi-Fi Functions

Cannot connect with an access point.
- Wi-Fi networks with a stealth function that do not broadcast their network name (SSID) will not be detected by the camcorder during the Wi-Fi network setup. Perform the setup manually (📖 149) or turn off the stealth function of the access point.
- Password information is not saved with the camera settings. When you load onto the camcorder camera settings from an SD card, all the encryption keys and passwords in the network-related settings are reset. Edit the network-related settings as necessary (📖 152).
- The wireless signal is not strong enough or there are other devices in the vicinity interfering with the wireless signal. Refer to *Precautions Regarding Wi-Fi Networks* (📖 189).

Cannot establish a Camera Access Point connection with a Wi-Fi-enabled device.
- When you reset all the camcorder's settings, all network settings are lost as well. Set up the Camera Access Point settings again (📖 149).
- The wireless signal is not strong enough or there are other devices in the vicinity interfering with the wireless signal. Refer to *Precautions Regarding Wi-Fi Networks* (📖 189).

The Playback via Browser application will not start on the Web browser.
- Make sure to activate the function on the camcorder with the [Other Functions] ❯ [Playback via Browser] setting (📖 161).
- The URL entered into the Web browser's address bar is incorrect. Enter the URL exactly as it appears on the camcorder's screen.
- The SD card slot cover is open or there is no SD card in the camcorder. Check that an SD card that contains recordings is correctly inserted into the camcorder and the SD card slot cover is closed.

The Browser Remote application will not start on the Web browser.
- Make sure to activate the function on the camcorder with the [Other Functions] ❯ [Browser Remote] setting (📖 153).
- The URL entered into the Web browser's address bar is incorrect. Check the [Network Settings 4/9] status screen and make sure to use the IP address assigned to the camcorder as the URL (📖 153).

Downloaded From camera-usermanual.com Canon Manuals

The Browser Remote or Playback via Browser screen is not displayed correctly on the Web browser.
- The device, operating system or Web browser used may not be supported. For the latest information about supported systems, visit your local Canon Web site.
- Enable JavaScript and cookies in your Web browser's settings. For details, refer to the help modules or online documentation of the Web browser used.

Using the Playback via Browser application, playback on a Wi-Fi-enabled device is not smooth.
- The wireless signal is not strong enough or there are other devices in the vicinity interfering with the wireless signal. Refer to *Precautions Regarding Wi-Fi Networks* (📖 189).
- Playback may not be smooth depending on network conditions.

Precautions Regarding Wi-Fi Networks

When using a Wi-Fi network, try the following corrective actions if the transmission rate drops, the connection is lost, or other problems occur.

Location of the access point (wireless router)
- When using a Wi-Fi network indoors, place the access point in the same room where you are using the camcorder.
- Place the access point in an open, unobstructed location, where people or objects do not come between it and the camcorder.
- Place the access point as close as possible to the camcorder. In particular, note that during outdoor use in poor weather, rain may absorb radio waves and disrupt the connection.

Nearby electronic devices
- If the transmission rate over a Wi-Fi network drops because of interference from the following electronic devices, switching to the 5 GHz band* or to a different channel may solve the problem.
- Wi-Fi networks using the IEEE 802.11b/g/n protocol operate in the 2.4 GHz band. For this reason, the transmission rate may drop if there are nearby microwave ovens, cordless telephones, microphones, or similar devices operating on the same frequency band.
- If another access point operating on the same frequency band as the transmitter is used nearby, the transmission rate may drop.

* The 5 GHz band is not available for camcorders whose identification label contains the camcorder ID “ID0044” and the text “2.4 GHz only” (📖 203).

Using multiple camcorders/access points
- Check that there are no IP address conflicts among the devices connected to the same network.
- If multiple C100 Mark II camcorders are connected to a single access point, connection speeds may be reduced.
- To reduce radio wave interference when there are multiple access points using IEEE 802.11b/g or IEEE 802.11n (in the 2.4 GHz band), leave a gap of four channels between each wireless access point. For example, use channels 1, 6, and 11, channels 2, 7, and 12, or channels 3, 8, and 13. If you can use IEEE 802.11a/n (in the 5 GHz band*), switch to IEEE 802.11a/n and specify a different channel.

* The 5 GHz band is not available for camcorders whose identification label contains the camcorder ID “ID0044” and the text “2.4 GHz only” (📖 203).

List of Messages

Refer to this section if a message appears on the screen. The messages in this section appear in alphabetical order. Note that for some messages, an indication of the SD card involved (SD A or SD B) may appear above the message itself. For error messages related to network connections, refer to *Wi-Fi Functions* (📖 192).

Accessing SD A/SD B Do not remove
- You opened the SD card compartment cover while the camcorder was accessing the SD card. Close the SD card compartment cover.

Buffer overflow. Recording was stopped.
- The data transfer rate was too high for the SD card in use and the recording was stopped. Use a recommended card (📖 40).

Camera ⇔ Lens communication error. Clean the lens’s contacts and reattach the lens.
- The camcorder cannot correctly communicate with the lens due to dirty lens contacts. After the message disappears, the LENS icon appears on the screen. Clean the lens's contacts and reattach the lens.

Cannot acquire battery information
- Battery information can be displayed only for batteries bearing the Intelligent System mark.

Downloaded From camera-usermanual.com Canon Manuals

Cannot acquire battery information Continue using this battery pack?
- You attached a battery pack that does not bear the Intelligent System mark.
- If you are using a battery pack that bears the Intelligent System mark, there may be a problem with the camcorder or battery pack. Consult a Canon Service Center.

Cannot play back
- The file control information is corrupted or there was an decoder error. Turn off the camcorder and back on again. If this does not solve the problem, consult a Canon Service Center.
  - Corrupted file control information cannot be recovered. SD cards or clips with corrupt file control information cannot be read by the supplied software, **Data Import Utility**.

Cannot record
- The file control information is corrupted or there was an encoder error. Turn off the camcorder and back on again. Then, remove the SD card being used and reinsert it. Alternatively, replace the SD card. If this does not solve the problem, consult a Canon Service Center.
  - Corrupted file control information cannot be recovered. SD cards or clips with corrupt file control information cannot be read by the supplied software, **Data Import Utility**.

Cannot record movies on this memory card
- Video cannot be recorded on a 64 MB or smaller SD card. Use a recommended card (📖 40).

Cannot restore
- Could not recover data on the SD card. Save your clips (📖 143) and initialize the SD card (📖 42).

Cannot start continuous rec
- You have already recorded the maximum number of continuous recording clips (200 clips) in a single SD card. Replace the SD card(s).

Cannot switch SD card slots
- The SLOT SELECT button was pressed while the camcorder is recording. Wait until recording is finished to change the selected SD card slot.

Change the battery pack
- The battery pack is exhausted. Replace or charge the battery pack.

Check the connection of the grip unit
- The grip unit may not be attached correctly. Check the connection.

Check the data on SD A/SD B Initializing the card is also recommended
- The first time you use an SD card with this camcorder, initialize it first (📖 42).
- The SD card cannot be used for any of the following reasons.
  - A problem has occurred with the SD card.
  - The camcorder cannot read the SD card's data.
  - The SD card was initialized using a computer.
  - The SD card has been partitioned.
- Save your clips (📖 143) and initialize the SD card (📖 42).

Check the SD card
- Use a recommended SD card (📖 40).

Check SD A/SD B
- The SD card cannot be accessed. Check that the SD card is inserted correctly and not malfunctioning.
- Due to an SD card error, recording on/playback from the SD card is not possible. Remove and then reinsert the SD card or use a different SD card.
- You inserted a MultiMedia Card (MMC) into the camcorder. Use a recommended SD card (📖 40).
- If after the message disappears, the SD card access indicator illuminates in red, perform the following: Turn off the camcorder and remove and reinsert the SD card. If the SD card access indicator illuminates in green, you can resume recording/playback. If the problem persists, save your recordings (📖 143) and initialize the SD card (📖 42).

Cover is open
- The SD card compartment cover was open when the camcorder was switched to or turned on in CAMERA mode. Close the compartment cover.

Data on SD A/SD B needs recovering Attempt to recover?
- If data on the SD card is corrupted, such as when the power suddenly turned off while recording, the data must be recovered. When this message appears, select [OK] and then press the joystick.

Data on SD A/SD B needs recovering Change the position of the LOCK switch on the memory card.
- This message will appear the next time you turn on the camcorder if power supply was accidentally interrupted while the camcorder was writing on the SD card and later the position of the SD card's LOCK switch was changed to prevent erasure. Change the position of the LOCK switch.

Downloaded From camera-usermanual.com Canon Manuals

Fan error
- The cooling fan has stopped working or may not be working properly. Consult a Canon Service Center.

File name error
- The folder and file numbers have reached their maximum value. Set [Other Functions] ▶ [File Numbering] to [Reset] and delete all the MP4 clips (📖 132) and photos (📖 166) on the SD card or initialize it (📖 42).

Invalid operation
- The following operations cannot be performed.
  - In CAMERA mode, immediately reviewing a recording made using pre-recording.
  - Pressing the START/STOP button when there is no SD card in the camcorder.
  - During continuous recording mode, pressing the START/STOP button while continuous recording is stopped and recording is not possible (not enough space on the SD card, or maximum number of shots or continuous recording clips already recorded).

Lens error Turn the camcorder off, then on again.
- There was a communication error between the camcorder and the lens. Turn the camcorder off and then on again.

Lens firmware update Firmware update failed. Try updating again.
- The lens's firmware could not be correctly updated. Try updating the lens's firmware again.

May not be possible to record movies on this memory card
- You may not be able to record video on an SD card without a speed class rating or rated SD Speed Class 2 or 4. Replace the SD card with one rated SD speed class 6 or 10.

Media full
- SD card A and SD card B are full. Delete some clips (📖 132) or photos (📖 166) to free some space or replace one or both SD cards.

Media is almost full
- The amount of available space on SD card A and SD card B combined is low. Replace one or both SD cards.

Memory card is write-protected
- The LOCK switch on the SD card is set to prevent accidental erasure. Change the position of the LOCK switch.

No clips
- There are no clips on the SD card to play back. Clips must be recorded (📖 47) in order to play them back.

No photos
- There are no photos on the SD card to play back. Photos must be taken (📖 163) in order to view them.

Number of clips already at maximum
- The SD card selected for recording already contains the maximum number of AVCHD clips (3,999 clips). Replace the SD card or use the SD card in the other SD card slot.
- Because both SD cards reached the maximum number of clips, double slot recording is not available.
  - During double slot recording, both "SD A" and "SD B" will appear in the message.

Number of shots already at maximum
- You have already recorded the maximum number of shots (3,999 shots) in a single SD card. When using two SD cards, you cannot record additional shots on either SD card. To add more shots, replace the SD card(s).

Number of shots in this clip already at maximum
- You have already recorded the maximum number of shots (950 shots) in a single continuous recording clip. Continuous recording can continue but you cannot record additional shots. To add more shots, stop the continuous recording to record a clip and then start recording a new continuous recording clip (📖 98).

Pre Rec was canceled. Activate Pre Rec again?
- Pre-recording was deactivated automatically after the camcorder was left in record pause mode for about 1 hour with pre-recording activated. Select [On] and then press the joystick to activate pre-recording again.

Pre Rec will be canceled in a moment.
- The camcorder has been in record pause mode for about 1 hour with pre-recording activated. Pre-recording will be deactivated automatically in approximately 1 minute.

Reached the recording limit for one clip. Recording was stopped.
- When recording a single clip for an extended period of time, the clip will be split into smaller video files every 4 GB. This message will appear when the number of smaller video files reaches 50.

Recorded at 50.00 Hz/59.94 Hz Check the data on SD A/SD B Initializing the card is also recommended
- The SD card contains clips that were recorded using a recording type (system frequency) other than the one currently used by the camcorder. To record on this SD card, save your clips (📖 143) and initialize the SD card (📖 42). To play back the recordings on the SD card, set [Other Functions] ▶ [System Frequency] to [59.94 Hz] or [50.00 Hz] as necessary, so the camcorder matches the SD card.

Downloaded From camera-usermanual.com Canon Manuals

Recording was stopped.
- The file control information is corrupted or there was an encoder error. Turn off the camcorder and back on again. Then, remove the SD card being used and reinsert it. Alternatively, replace the SD card. If this does not solve the problem, consult a Canon Service Center.
  - Corrupted file control information cannot be recovered. SD cards or clips with corrupt file control information cannot be read by the supplied software, **Data Import Utility**.

This clip needs recovering. Attempt to recover?
- If the clip is corrupted, such as when the power suddenly turned off while recording, the clip must be recovered. When this message appears, select [OK] and then press the joystick.

This clip needs recovering. Change the position of the LOCK switch on the memory card.
- The LOCK switch on the SD card is set to prevent accidental erasure. Change the position of the LOCK switch.

This function is not compatible with the current lens.
- The selected setting is not compatible with the lens currently attached to the camcorder and cannot be used.

This photo cannot be displayed
- You may not be able to display photos taken with other devices or image files created or edited on a computer.

SD A→ SD B/ SD B→ SD A Switched
- This message appears when you use the SLOT SELECT button to switch the SD card slot in use or recording continued from one SD card to the other.

SD A→ SD B/ SD B→ SD A Will switch in a moment
- The SD card is almost full so recording will continue on the other SD card in approximately 1 minute.

Wi-Fi Functions

Along with this list, refer also to the instruction manuals of the access point or other external devices you are using.

A User is already accessing the server. Try again later.
- This message appears on the screen of the connected device. Another device connected to the network is already operating the camcorder. To use this device, first end the connection on the device accessing the camcorder and then touch Retry.

Cannot create new folder on the FTP server.
- Check the user permissions/restrictions for accessing the FTP server.

Cannot log in to FTP server.
- Check the user name and password information in the FTP server settings (158).

Cannot transfer files to FTP server.
- Check that there is enough available space in the data storage device (hard disk, etc.) that contains the destination folder on the FTP server.

Check the Media.
- An error occurred with the SD card while files were being transferred to the FTP server. Check the SD card from which you are transferring files and try the FTP transfer operation again.

Check the network configuration.
- The camcorder could not connect to the network using the current settings. Check that the network settings are correctly configured (181).

File transfer was not completed.
- The camcorder was turned off while the last FTP transfer operation was still in progress. Transfer the files again (158).

FTP server not found.
- The FTP server could not be found. Check the FTP server settings (158).

FTP transfer error. File transfer was not completed.
- An error occurred while transferring files to the FTP server. Turn then camcorder and the FTP server off and then on again and try again the FTP transfer.

IP address conflict
- Another device on the same network has the same IP address assigned to the camcorder. Change the IP address of the conflicting device or the camcorder.

Downloaded From camera-usermanual.com Canon Manuals

Memory card cover was opened so network functions will be interrupted.
- The SD card compartment cover was opened while the SD card was being accessed. Stop the Wi-Fi function in use and end the network connection.

Multiple access points detected. Try the operation again.
- There are multiple access points sending out a WPS signal at the same time. Try the operation again later or perform setup using the [WPS: PIN Code] or [Search for Access Points] option (📖 146).

Network connection terminated
- An error occurred on the access point or connected device. Check the network or connected and try connecting again.
- The Wi-Fi signal became too weak and the wireless connection was lost. Wait a moment or turn off other devices in the area that may be interfering with the Wi-Fi signal and then try connecting again.

Network is not working correctly
- There's a hardware problem with the camcorder's network related circuitry. Try turning the camcorder off and the on again. If the problem persists, consult a Canon Service Center.

No access points found
- The camcorder searched for active Wi-Fi networks (access points) in the area but none were found. Make sure the access point is working correctly and try connecting again.
- The access point is operating in stealth mode. Deactivate the stealth function in the wireless router (access point) settings.
- The connection wizard may not be able to find the access point if MAC address filtering is activated. Check the [Network Settings 1/9] status screen (📖 181) and make sure to add the camcorder's MAC address to the list of approved wireless devices in the wireless router (access point) settings.

No files available for transfer.
- All the files selected for transfer have already been transferred to the FTP server.

Unable to complete WPS.
- The access point's encryption method is set to [WEP]. Wi-Fi Protected Setup (WPS) cannot connect to access points set to this encryption method. Change the access point's encryption method or use another connection method (📖 146).

Unable to complete WPS. Try the operation again.
- More than 2 minutes passed between activating WPS on the access point and selecting [OK] on the camcorder. Start over the WPS procedure from the beginning.
- The WPS button was not held down long enough. Refer to the instruction manual of your wireless router. When using WPS to make a wireless connection, keep the WPS button held down until the wireless router's WPS function is activated.

Unable to connect
- Could not connect to the access point or network device selected.
- Cordless phones, microwave ovens, refrigerators and other appliances may interfere with the wireless signal. Try using the camcorder in a location farther away from such appliances.

Unable to obtain an IP address
- If you are not using a DHCP server, connect using the [Manual] option and enter the IP address using the [Manual] option (📖 150).
- Turn on the DHCP server. If it is already on, make sure it is functioning properly.
- Make sure the address range for the DHCP server is sufficient.
- If you are not using a DNS server, set the DNS address to [0.0.0.0].
- Set the DNS server's IP address in the camcorder.
- Turn on the DNS server. If it is already on, make sure it is functioning properly.
- Make sure that the DNS server's IP address and the name for that address are correctly configured.
- If you are using a wireless gateway router, make sure all of the devices in the network, including the camcorder, are configured with the correct gateway address.

Wi-Fi authentication unsuccessful
- Check the access point's authentication/encryption method and encryption key and change the camcorder's Wi-Fi settings (📖 152) as necessary.

Wi-Fi cannot be used while the wireless microphone is attached.
- Wi-Fi connections cannot be used while an optional WM-V1 Wireless Microphone is attached to the camcorder. Disconnect the WM-V1 from the camcorder and turn it off.

Wi-Fi error. Incorrect authentication method
- Check the access point's authentication/encryption method and change the camcorder's Wi-Fi settings (📖 152) as necessary.

Downloaded From camera-usermanual.com Canon Manuals

Wi-Fi error. Incorrect encryption key.

- When the authentication mode was set to [WPA-PSK] or [WPA2-PSK], or the encryption method was set to [WEP], the encryption key (WEP index) entered or its length (number of characters) is incorrect.
  - When entering ASCII characters, enter 5 characters (64-bit encoding) or 13 characters (128-bit encoding). When entering hexadecimal characters, enter 10 characters (64-bit encoding) or 26 characters (128-bit encoding).

Wi-Fi error. Incorrect encryption method

- Make sure the camcorder and access point are using the same authentication/encryption method.

Downloaded From camera-usermanual.com Canon Manuals

Handling Precautions

Camcorder

Be sure to observe the following precautions to ensure maximum performance.

- Do not carry the camcorder by the OLED panel. Be careful when closing the OLED panel.
- Do not leave the camcorder in places subject to high temperatures (like the inside of a car parked under direct sunlight), or high humidity.
- Do not use the camcorder near strong electromagnetic fields such as near powerful magnets and motors, MRI machines or high-voltage power lines. Using the camcorder in such places may cause anomalies in the video or audio or video noise to appear.
- Do not use the camcorder's Wi-Fi functions inside hospitals, medical clinics or onboard aircraft. In addition, do not use them near medical equipment or sensitive electronic devices as it may affect their performance. In the case of pacemakers, keep the camcorder at least 22 cm (8.7 in.) away from the device.
- The camcorder's Wi-Fi functions may be subject to interference from devices such as cordless phones and microwave ovens. Keeping as much distance as possible from these devices or using the camcorder's Wi-Fi functions at a different time of day may reduce such interference.
- Do not use or store the camcorder in dusty or sandy places. The camcorder is not dustproof or waterproof – avoid also water, mud or salt. If any of the above should get into the camcorder it may damage the camcorder and/or the lens. Consult a Canon Service Center as soon as possible.
- Be careful to avoid dust and dirt particles accumulating on the lens or entering the camcorder. When you finish using the camcorder, make sure to attach the body cap to the lens mount and the lens cap and dust cap to the lens.
- Do not leave a lens under the sun without the lens cap attached, whether it is attached to the camcorder or not. Doing so may focus sunlight on a single spot, which can cause a fire.
- Do not point the camcorder or viewfinder toward an intense light source, such as the sun on a sunny day or an intense artificial light source. Doing so may damage the image sensor or the camcorder's internal components. Be careful especially when using a tripod or shoulder strap. When you are not using the camcorder, make sure to attach the body cap to the camcorder.
- Do not look at an intense light source, such as the sun on a sunny day or an intense artificial light source, through the lens. Doing so may cause severe eye injury and even blindness.
- Be careful of heat generated by lighting equipment.
- Do not disassemble the camcorder. If the camcorder does not function properly, consult qualified service personnel.
- Do not touch the lens contacts on the lens mount. Dirty contacts may cause a poor contact between the camcorder and the lens resulting in incorrect operation of the camcorder. After removing the lens, make sure to attach the body cap to the lens mount and the lens cap and dust cap to the lens.

- Handle the camcorder with care. Do not subject the camcorder to shocks or vibration as this may cause damage. When using the shoulder strap, do not allow the camcorder to swing and hit an object.
- To prevent equipment breakdowns and excessive heating, do not connect the supplied battery charger or compact power adapter to voltage converters for overseas travels or special power sources such as those on aircraft and ships, DC-AC inverters, etc.

Long-term storage

If you do not intend to use the camcorder for a long time, store it in a place free of dust, in low humidity, and at temperatures not higher than 30 °C (86 °F).

Downloaded From camera-usermanual.com Canon Manuals

Battery Pack

DANGER!

Treat the battery pack with care.

- Keep it away from fire (or it might explode).
- Do not expose the battery pack to temperature higher than 60 °C (140 °F). Do not leave it near a heater or inside a car in hot weather.
- Do not try to disassemble or modify it.
- Do not drop it or subject it to shocks.
- Do not get it wet.

- Dirty terminals may cause a poor contact between the battery pack and the camcorder. Wipe the terminals with a soft cloth.

Long-term storage

- Store battery packs in a dry place at temperatures no higher than 30 °C (86 °F).
- To extend the battery life of the battery pack, discharge it completely before storing it.
- Charge and discharge all your battery packs fully at least once a year.

Always attach the battery terminal cover.

Do not allow any metal objects to touch the terminals (figure 1), as this can cause a short circuit and damage the battery pack. Attach the terminal cover whenever the battery pack is not being used (figure 2).

The battery terminal cover has a [▭]-shaped hole. This is useful when you wish to differentiate between charged and uncharged battery packs. For example, with charged battery packs, attach the terminal cover so that the [▭]-shaped hole shows the colored label.

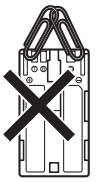

Figure 1

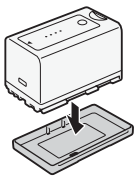

Figure 2

Back side of the battery pack

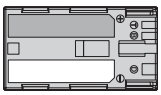

Terminal cover attached

Charged

Uncharged

Remaining battery time

If the remaining battery time displayed is not correct, charge the battery pack fully. Still, the correct time may not be displayed if a fully charged battery pack is used continuously in high temperatures or it is left unused for long periods of time. Also, the correct remaining time may not be displayed, depending on the battery life. Use the time shown on the screen as an approximation.

Regarding the use of non-Canon battery packs

- We recommend using genuine Canon battery packs bearing the Intelligent System mark.

Intelligent Li-ion Battery

- If you attach to the camcorder battery packs that are not genuine Canon battery packs, the remaining battery time will not be displayed.

Downloaded From camera-usermanual.com Canon Manuals

SD Cards

- We recommend backing up the recordings on the SD cards onto your computer. Data may be corrupted or lost due to defects or exposure to static electricity. Canon shall not be liable for lost or corrupted data.
- Do not touch or expose the terminals to dust or dirt.
- Do not use SD cards in places subject to strong magnetic fields.
- Do not leave SD cards in places subject to high humidity and high temperature.
- Do not disassemble, bend, drop, or subject SD cards to shocks and do not expose them to water.
- Check the direction before inserting the SD cards. Forcing an SD card into the slot if it is not correctly oriented may damage the SD card or the camcorder.
- Do not attach any labels or stickers on the SD card.
- SD cards have a physical switch to prevent writing on the card so as to avoid the accidental erasure of the card's content. To write-protect the SD card, set the switch to the LOCK position.

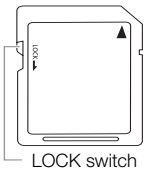

LOCK switch

Built-in Rechargeable Lithium Battery

The camcorder has a built-in rechargeable lithium battery to keep the date/time and other settings. The built-in lithium battery is recharged while you use the camcorder; however, it will discharge completely if you do not use the camcorder for about 3 months.

To recharge the built-in lithium battery: Connect the DC cable and compact power adapter to the camcorder and use a power outlet to power the camcorder for 24 hours while it is turned off.

Disposal

When you delete data on an SD card, only the file allocation table is altered and stored data is not physically erased. Take the necessary precautions when you dispose of an SD card, for example by physically damaging it to prevent the leakage of private data.

If giving an SD card to another person, initialize it using the [Complete] initialization option (📖 42). Fill it up with unimportant recordings, and then initialize it again. This makes recovering the original recordings very difficult.

Downloaded From camera-usermanual.com Canon Manuals

Maintenance/Others

Cleaning

Camcorder Body

- Use a soft, dry cloth to clean the camcorder body. Never use chemically treated cloths or volatile solvents such as paint thinner.

Lens

- Remove any dust or dirt particles using a non-aerosol type blower brush.
- Use a clean, soft lens-cleaning cloth to gently wipe the lens using commercially available cleaning fluid for eyeglasses. Never use tissue paper.

OLED Screen

- Clean the screen using a clean, soft lens-cleaning cloth.
- Condensation may form on the surface of the screen when the temperature changes suddenly. Wipe it with a soft dry cloth.

Condensation

Moving the camcorder or EF lens rapidly between hot and cold temperatures may cause condensation (water droplets) to form on its internal surfaces. Stop using the camcorder or EF lens if condensation is detected. Continued use may cause damage to it.

Condensation may form in the following cases:

- When the camcorder or EF lens is moved quickly from cold to warm places
- When the camcorder or EF lens is left in a humid room
- When a cold room is heated rapidly

To avoid condensation

- Do not expose the camcorder or EF lens to sudden or extreme changes in temperature.
- Remove the SD cards and battery pack. Then, place the camcorder or EF lens in an airtight plastic bag and let it adjust gradually to temperature changes before removing it from the bag.

When condensation is detected

The precise time required for water droplets to evaporate will vary depending on the location and weather conditions. As a general rule, wait for 2 hours before resuming use of the camcorder or EF lens.

Using the Camcorder Abroad

Power Sources

You can use the supplied battery charger to charge battery packs or the supplied compact power adapter to power the camcorder in any country with a power supply between 100 and 240 V AC, 50/60 Hz. Consult a Canon Service Center for information on plug adapters for overseas use.

Downloaded From camera-usermanual.com Canon Manuals

Optional Accessories

The following optional accessories are compatible with this camcorder. The availability differs from area to area.

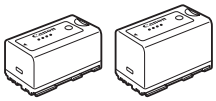

BP-950G, BP-955,
BP-970G, BP-975
Battery Pack

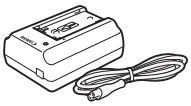

CA-930 Compact
Power Adapter[1]

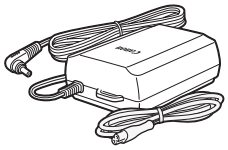

CA-940N[2] or CA-941
Compact Power Adapter
(incl. power cord)

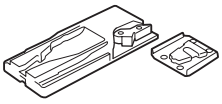

TA-100 Tripod Adapter

TB-1 Tripod Adapter
Base

GP-E2
GPS Receiver

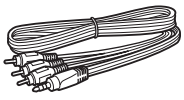

STV-250N Stereo Video
Cable

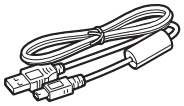

IFC-400PCU
USB Cable

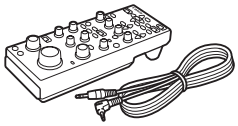

RC-V100 Remote
Controller

[1] This accessory cannot be used to power this camcorder directly; it can only be used to charge the battery pack.
[2] For camcorders sold in the United States, Canada and Mexico only.

For our customers in the USA: Call or visit your local retailer/dealer for genuine Canon video accessories. You can also obtain genuine accessories for your Canon camcorder by calling: 1-800-828-4040, Canon U.S.A. Information Center.

Use of genuine Canon accessories is recommended.
This product is designed to achieve excellent performance when used with genuine Canon accessories. Canon shall not be liable for any damage to this product and/or accidents such as fire, etc., caused by the malfunction of non-genuine Canon accessories (e.g., a leakage and/or explosion of a battery pack). Please note that this warranty does not apply to repairs arising out of the malfunction of non-genuine Canon accessories, although you may request such repairs on a chargeable basis.

Downloaded From camera-usermanual.com Canon Manuals

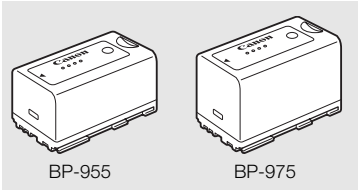

Battery Packs

When you need extra battery packs, select from the following: BP-950G, BP-955, BP-970G, BP-975

When you use battery packs bearing the Intelligent System mark, the camcorder will communicate with the battery and display the remaining usage time (accurate to 1 minute). You can only use and charge these battery packs with camcorders and chargers compatible with Intelligent System.

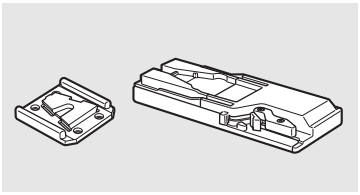

TA-100 Tripod Adapter

The TA-100 allows you to quickly mount/unmount the camcorder on/from a tripod.

This mark identifies genuine Canon video accessories. When you use Canon video equipment, we recommend Canon-brand accessories or products bearing the same mark.

Downloaded From camera-usermanual.com Canon Manuals

Specifications

C100 Mark II

System

- Recording System

  Movies: AVCHD[1] Video compression: MPEG-4 AVC/H.264
  Audio compression: Linear PCM, 16 bits, 48 kHz, 2 channels[2]; Dolby Digital 2ch

  MP4 Video compression: MPEG-4 AVC/H.264
  Audio compression: MPEG-4 AAC-L, 16 bits, 48 kHz, 2 channels

  [1] Compatible with AVCHD ver. 2.0 specifications.
  [2] Linear PCM is available only when the bit rate is 28 Mbps LPCM or 24 Mbps LPCM.

  Photos: DCF (Design rule for Camera File system), compatible with Exif Ver. 2.3, JPEG compression

- Video Configuration (recording/playback)

  AVCHD
  - 28 Mbps, 28 Mbps LPCM
    - 1920x1080: 59.94P (59.94 Hz), 50.00P (50.00 Hz)
  - 24 Mbps, 24 Mbps LPCM, 17 Mbps
    - 1920x1080: 59.94i, PF29.97, 23.98P (59.94 Hz); 50.00i, PF25.00 (50.00 Hz)
  - 7 Mbps
    - 1440x1080: 59.94i, PF29.97, 23.98P (59.94 Hz); 50.00i, PF25.00 (50.00 Hz)

  MP4
  - 35 Mbps
    - 1920x1080: 59.94P (59.94 Hz), 50.00P (50.00 Hz)
  - 24 Mbps, 17 Mbps
    - 1920x1080: 29.97P, 23.98P (59.94 Hz); 25.00P (50.00 Hz)
  - 4 Mbps
    - 1280x720: 29.97P, 23.98P (59.94 Hz); 25.00P (50.00 Hz)
  - 3 Mbps
    - 640x360: 29.97P, 23.98P (59.94 Hz); 25.00P (50.00 Hz)

- Recording Media (not included)

  SD, SDHC or SDXC memory card (2 slots)
  Custom picture files and camera settings files can be saved on and read from the SD card as well.

- Maximum Recording Time

  AVCHD clips:

  16 GB SD card
  - 28 Mbps LPCM/28 Mbps: 75 min.
  - 24 Mbps LPCM/24 Mbps: 85 min.
  - 17 Mbps: 125 min.
  - 7 Mbps: 285 min.

  32 GB SD card
  - 28 Mbps LPCM/28 Mbps: 150 min.
  - 24 Mbps LPCM/24 Mbps: 175 min.
  - 17 Mbps: 250 min.
  - 7 Mbps: 575 min.

  MP4 clips:

  16 GB SD card
  - 35 Mbps: 60 min.
  - 24 Mbps: 85 min.
  - 17 Mbps: 125 min.
  - 4 Mbps: 520 min.
  - 3 Mbps: 685 min.

  32 GB SD card
  - 35 Mbps: 120 min.
  - 24 Mbps: 175 min.
  - 17 Mbps: 250 min.
  - 4 Mbps: 1040 min.
  - 3 Mbps: 1375 min.

  Approximate figures based on non-stop recording.

- Image Sensor: Super-35mm-equivalent CMOS sensor, approx. 8,290,000 pixels (3840x2160)
- OLED Screen: 8.77 cm (3.5 in.) organic LED display, equivalent to approx. 1,230,000 dots, 100% coverage

Downloaded From camera-usermanual.com Canon Manuals

- **Viewfinder:** 11.5 mm (0.45 in.) color LCD, equivalent to approx. 1,230,000 dots, 99.8% coverage
- Lens Mount
  Canon EF mount compatible with Canon EF lenses (including EF-S lenses) and Canon EF Cinema lenses (EF mount)
  Lens multiplication factor: approx. 1.53 (for 35mm-equivalent focal length)
- **ND Filter:** Built-in (Off, 2, 4 or 6 stops), manual
- White Balance
  Custom white balance (two sets, A and B); two preset settings (daylight, 5,500 K and incandescent lamp, 3,000 K) that can be further fine-tuned; color temperature setting (2,000 K to 15,000 K); automatic white balance
  Color temperatures are approximate and given for reference purposes only.
- **Iris:** Manual (1/2-stop increments, 1/3-stop increments, fine-tuning), push auto iris, automatic[4]
- **Focus:** Manual, one-shot AF, continuous AF, face AF[4]
  [4] Only when an EF-S10-18mm f/4.5-5.6 IS STM, EF-S18-135mm f/3.5-5.6 IS STM, EF-S18-55mm f/3.5-5.6 IS STM or EF-S55-250mm f/4-5.6 IS STM lens is attached to the camcorder.
- ISO Speed
  ISO 320 to ISO 20000, ISO 25600[5] to ISO 102400[5] (1-stop or 1/3-stop increments)
- Gain
  -6 dB to 30 dB (3-dB increments), 33 dB[5] to 44 dB[5], -6 dB to 24 dB (fine-tuning in 0.5-dB increments)
  [5] With extended ISO/gain range.
- Shutter Speed
  Speed (1/3-stop increments, 1/4-stop increments), angle, clear scan, slow, off
- **Lens Peripheral Illumination Correction:** Available for Canon EF lenses[6]
  [6] Some Canon EF lenses are not compatible with peripheral illumination correction.
- Sensor Sensitivity (ISO 640 (0 dB), 2000 lux, 89.9% reflection)
  59.94 Hz: F9 (1920x1080 at 59.94i), 50.00 Hz: F10 (1920x1080 at 50.00i)
- S/N Ratio (ISO 850, using Canon Log gamma)
  54 dB (typical, 1920x1080, 59.94 Hz at PF29.97 / 50.00 Hz at PF25.00)
- **Monaural microphone:** Mono electric condenser microphone
- Subject Illumination (24 dB, with an f/1.2 lens)
  59.94 Hz: 0.30 lux (PF29.97, shutter speed 1/30)
  50.00 Hz: 0.25 lux (PF25.00, shutter speed 1/25)
- Size of Photos
  When recording AVCHD clips: 1920x1080
  MP4 clips: Same size as the resolution set for the video configuration
  When capturing photos from a clip: 1920x1080

Wi-Fi

- **Wireless Standard:** IEEE802.11b/g/n (2.4 GHz band), IEEE802.11a/n (5 GHz band)*
  * Not available for all models. See the following sidebar.
- **Connection Methods:** Wi-Fi Protected Setup (WPS), search for access points, manual, Camera Access Point
- **Supported Channels:** See the following sidebar.
- **Authentication Methods:** Open, WPA-PSK, WPA2-PSK
- **Encryption Methods:** WEP-64, WEP-128, TKIP, AES

Downloaded From camera-usermanual.com Canon Manuals

- Maximum Data Transfer Rates (theoretical values)
  11 Mbps (IEEE802.11b), 54 Mbps (IEEE802.11a/g)*, 150 Mbps (IEEE802.11n)
  * Not available for all models. See the following sidebar.

Available frequencies and channels

The camcorder's Wi-Fi functions operate in a predetermined range of frequencies and channels. Note that not all channels may be available for a direct Camera Access Point connection with Wi-Fi-enabled devices. Additionally, the IEEE802.11a protocol (5 GHz frequency band) is not available for all models. Check the identification label on the bottom of your camcorder. If the camcorder ID is "ID0044" and the label contains the text "2.4 GHz only", the camcorder can operate only in the 2.4 GHz frequency band.

Camcorder ID	Frequency	Channels	Available for Camera Access Point connections
ID0042	2412 MHz to 2462 MHz	1 to 11	Yes
	5280 MHz to 5320 MHz	56 to 64	No
	5745 MHz to 5805 MHz	149 to 161	Yes
ID0043	2412 MHz to 2472 MHz	1 to 13	Yes
	5180 MHz to 5320 MHz	36 to 64	No
ID0044	2412 MHz to 2472 MHz	1 to 13	Yes

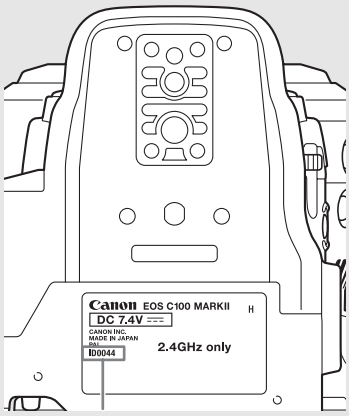

Camcorder ID

Terminals

- HDMI OUT Terminal: HDMI connector (type A), output only, supports time code output, supports 1080/59.94P and 1080/50.00P output
- AV OUT Terminal
  Ø 3.5 mm 4-pole minijack, output only
  Video: 1 Vp-p / 75 Ω unbalanced
  Audio: -10 dBV (47 kΩ load, output level 1 Vrms) / 3 kΩ or less
- MIC Terminal
  Ø 3.5 mm stereo mini-jack, -72 dBV (manual volume center, full scale -18 dB) / 600 Ω
  Microphone attenuator: 20 dB
- (Headphone) Terminal
  Ø 3.5 mm stereo mini-jack, -∞ to -12 dBV (16 Ω load, volume range Min to Max) / 50 Ω or less
- USB Terminal: mini-B, Hi-Speed USB, output only
- REMOTE Terminal: Ø 2.5 mm stereo mini-jack
- Grip Unit Connection Terminal
  Proprietary connector for the supplied grip unit connection plug

Power/Others

- Power Supply (rated): 7.4 V DC (battery pack), 8.4 V DC (DC IN)
- Power Consumption (viewfinder/OLED screen normal brightness)
  59.94 Hz: 9.8 W (when the frame rate is 59.94i)
  50.00 Hz: 9.2 W (when the frame rate is 50.00i)
- Operating Temperature: 0 – 40 °C (32 – 104 °F)

Downloaded From camera-usermanual.com Canon Manuals

- Dimensions (W x H x D)
  Minimal configuration with thumb rest:
  147 x 174 x 169 mm (5.8 x 6.9 x 6.7 in.)
  Configuration with grip unit and eye cup:
  188 x 189 x 219 mm (7.4 x 7.4 x 8.6 in.)
  Configuration with handle unit, grip unit and eye cup:
  188 x 280 x 334 mm (7.4 x 11.0 x 13.1 in.)
- Weight
  Camcorder unit only:
  1,125 g (2.5 lb.)
  Camcorder with grip unit and grip belt, BP-955 battery pack, eye cup and two SD cards:
  1,590 g (3.5 lb.)
  Camcorder with grip unit and grip belt, handle unit, BP-955 battery pack, eye cup and two SD cards:
  1,950 g (4.3 lb.)

Modular Units

Grip Unit

Modular unit can be attached at multiple positions (15º intervals); includes limited recording controls.

- Weight: Approx. 215 g (7.6 oz.)

Handle Unit

Modular unit includes a cold accessory shoe and socket for 0.64 cm (1/4 in.) screws for other accessories, built-in microphone, XLR terminals and related audio controls.

- CH1, CH2 Terminals
  XLR jack (pin1: shield, pin2: hot, pin3: cold), 2 sets
  Sensitivity
  MIC setting: -60 dBu (manual volume center, full scale -18 dB) / 600 Ω
  LINE setting: 4 dBu (manual volume center, full scale -18 dB) / 10 kΩ
  Microphone attenuator: 20 dB
- Microphone: Stereo electret condenser microphone
- Weight: Approx. 360 g (12.7 oz.)

CA-940N Compact Power Adapter*

- Rated Input: 100 – 240 V AC, 50/60 Hz, 0.72 A (100 V) – 0.39 A (240 V)
- Rated Output: 8.4 V DC, 4.1 A
- Operating Temperature: 0 – 40 °C (32 – 104 °F)
- Dimensions (W x H x D): Approx. 103 x 51 x 139 mm (4.1 x 2.0 x 5.5 in.)
- Weight: 465 g (1.0 lb.)

* Supplied with camcorders sold in the United States, Canada and Mexico only. The CA-941 is supplied with camcorders sold in other regions.

Downloaded From camera-usermanual.com Canon Manuals

CA-941 Compact Power Adapter

- **Rated Input:** 100 – 240 V AC, 50/60 Hz, 0.65 A (100 V) – 0.36 A (240 V)
- **Rated Output:** 8.4 V DC, 3.7 A
- **Operating Temperature:** 0 – 40 °C
- **Dimensions (W x H x D):** Approx. 103 x 51 x 139 mm
- **Weight:** 480 g

CG-940 Battery Charger

- **Rated input:** 100 – 240 V AC, 50/60 Hz, 24 W
- **Rated Output:** 8.4 V DC, 1.5/2.0 A
- **Operating Temperature**: 0 – 40 °C
- **Dimensions (W x H x D):** 85 x 51 x 110 mm
- **Weight:** Approx. 240 g

BP-955 Battery Pack

- **Battery Type:** Rechargeable lithium ion battery, compatible with Intelligent System
- **Rated Voltage:** 7.4 V DC
- **Operating Temperature:** 0 – 40 °C (32 – 104 °F)
- **Battery Capacity**
  Typical: 5,200 mAh
  Minimum: 37 Wh / 4,900 mAh
- **Dimensions (W x H x D):** 38.2 x 43.5 x 70.5 mm (1.5 x 1.7 x 2.8 in.)
- **Weight:** 220 g (7.8 oz)

EF24-105mm f/4L IS USM Lens

This lens is available only in some lens kits sold in select regions. The EF1.4X II/EF2X II extenders cannot be used with this lens.

- **Focal Length/Aperture:** 24 – 105 mm, f/4
- **Lens Configuration:** 18 elements in 13 groups
- **Minimum Aperture:** f/22
- **Angle of View**
  Diagonal: 84° – 23°20', Vertical: 53° – 13°, Horizontal: 74°– 19°20'
- **Minimum Focusing Distance:** 0.45 m (1.5 ft.)
- **Maximum Magnification:** 0.23x (at 105 mm)
- **Field of View:** Approx. 345 x 535 mm – 106 x 158 mm (13.6 x 21.1 in. – 4.2 x 6.2 in.) (at 0.45 m)
- **Filter Diameter:** 77 mm
- **Dimensions*:** 83.5 x 107 mm (3.3 x 4.2 in.)

Downloaded From camera-usermanual.com Canon Manuals

- **Weight:** 670 g (23.6 oz.)
- **Hood:** EW-83H
- **Lens Cap:** E-77 II Lens Cap
- **Case:** LP1219

* The lens length is measured from the mount surface to the front end of the lens. Add 24.2 mm for the E-77 II lens cap.

EF-S18-135mm f/3.5-5.6 IS STM Lens

This lens is available only in some lens kits sold in select regions. Extenders and close-up lenses cannot be used with this lens.

- **Focal Length/Aperture:** 18 – 135 mm, f/3.5-5.6
- **Lens Configuration:** 16 elements in 12 groups
- **Minimum Aperture:** f/22-36 (1/3-stop increments); f/22-38 (1/2-stop increments)
- **Angle of View**
  Diagonal: 74°20' – 11°30', Vertical: 45°30' – 6°20', Horizontal: 64°30' – 9°30'
- **Minimum Focusing Distance:** 0.39 m (1.28 ft.)
- **Maximum Magnification:** 0.28x (at 135 mm)
- **Field of View:** Approx. 248 x 372 mm – 53 x 80 mm (9.76 x 14.65 in. – 2.09 x 3.15 in.) (at 0.39 m)
- **Filter Diameter:** 67 mm
- **Dimensions*:** 76.6 x 96 mm (3.02 x 3.78 in.)
- **Weight:** 480 g (16.9 oz.)
- **Hood:** EW-73B (optional accessory)
- **Lens Cap:** E-67/E-67 II Lens Cap
- **Case:** LP1116 (optional accessory)

* The lens length is measured from the mount surface to the front end of the lens. Add 21.5 mm to include the E-67 lens cap and dust cap, and 24.2 mm for the E-67 II lens cap.

Weight and dimensions are approximate. Errors and omissions excepted.
The information in this manual is verified as of November 2014. Subject to change without notice.

Downloaded From camera-usermanual.com Canon Manuals

Reference Tables

Charging Times

Use the supplied battery charger to charge battery packs. The charging times given in the following table are approximate and vary according to charging conditions and initial charge of the battery pack.

BP-950G	BP-955
245 min.	200 min.

Recording and Playback Times

Recording and playback times given in the following tables are approximate and vary according to charging, recording and playback conditions. They are based on using the supplied battery pack and having both the OLED screen and viewfinder on. The effective usage time of the battery pack may decrease when recording in cold surroundings, when using the brighter screen settings, etc. The "Recording (typical)" times are approximate times for recording with repeated operations such as start/stop and power on/off.

EF lenses with lens contacts draw power from the camcorder to operate some functions. Effective usage times may decrease depending on the lens used.

Recording AVCHD clips

System frequency	Frame rate	Usage Time	BP-955	BP-975
59.94 Hz	59.94P[1]	Recording (maximum)	205 min.	310 min.
		Recording (typical)	130 min.	195 min.
		Playback	275 min.	410 min.
	59.94i[2]	Recording (maximum)	210 min.	315 min.
		Recording (typical)	130 min.	200 min.
		Playback	280 min.	415 min.
	PF29.97[2]	Recording (maximum)	250 min.	370 min.
		Recording (typical)	155 min.	235 min.
		Playback	280 min.	415 min.
	23.98P[2]	Recording (maximum)	255 min.	395 min.
		Recording (typical)	160 min.	245 min.
		Playback	280 min.	420 min.
50.00 Hz	50.00P[1]	Recording (maximum)	215 min.	325 min.
		Recording (typical)	135 min.	205 min.
		Playback	280 min.	415 min.
	50.00i[2]	Recording (maximum)	220 min.	335 min.
		Recording (typical)	135 min.	210 min.
		Playback	280 min.	420 min.
	PF25.00[2]	Recording (maximum)	255 min.	385 min.
		Recording (typical)	155 min.	240 min.
		Playback	280 min.	420 min.

[1] Available bit rates are 28 Mbps LPCM and 28 Mbps.
[2] Available bit rates are 24 Mbps LPCM, 24 Mbps, 17 Mbps and 7 Mbps.

Downloaded From camera-usermanual.com Canon Manuals

Recording MP4 clips

System frequency	Frame rate	Usage Time	BP-955	BP-975
59.94 Hz	59.94P[3]	Recording (maximum)	200 min.	300 min.
		Recording (typical)	130 min.	190 min.
		Playback	275 min.	410 min.
	29.97P[4]	Recording (maximum)	245 min.	365 min.
		Recording (typical)	155 min.	230 min.
		Playback	280 min.	420 min.
	23.98P[4]	Recording (maximum)	255 min.	390 min.
		Recording (typical)	160 min.	240 min.
		Playback	280 min.	420 min.
50.00 Hz	50.00P[3]	Recording (maximum)	215 min.	320 min.
		Recording (typical)	135 min.	200 min.
		Playback	280 min.	415 min.
	25.00P[4]	Recording (maximum)	255 min.	380 min.
		Recording (typical)	155 min.	240 min.
		Playback	280 min.	420 min.

[3] Available bit rate is 35 Mbps.
[4] Available bit rates are 24 Mbps, 17 Mbps, 4 Mbps and 3 Mbps.

Approximate number of photos available on a 4 GB SD card

Photo size	Number of photos
1920x1080	2,830

Downloaded From camera-usermanual.com Canon Manuals

Index

50.00 Hz/59.94 Hz recordings 54

A

ABB (automatic black balance) 45
Accessories 199
AE shift 66
Aperture 63
Aspect ratio 139
Assignable buttons 107
Audio output 141
Audio peak limiter 89
Audio recording 84
Audio recording level 85, 89
Audio reference signal 91
AV OUT terminal 138
AVCHD format 54

B

Battery pack 23
Bit rate 54
Black balance 45
Browser Remote 153
Built-in backup battery 197

C

Camera settings 123
Canon Log gamma 53, 111
CINEMA (preset custom picture) 111
CINEMA preset settings 53
Clips
- Copying 131
- Deleting 132
- Playback 127
- Saving to a computer 143

Color bars 91
Condensation 198
Connection to an external monitor 137
Continuous AF 74
Continuous recording 98
Converting clips to MP4 133
Cooling fan 52
Custom displays 122
Custom functions 121
Custom picture 110
- Detailed custom picture settings 114
- Graphical interface 120

D

Data Import Utility 143
Date and time 26
DC IN terminal 25
Double slot recording 43
Drop frame (time code) 81

E

Edge monitor 93
EF lens 31
- EF24-105mm f/4L IS USM lens 100
- EF-S18-135mm f/3.5-5.6 IS STM lens .100

EF-S lens correction 32
Exposure compensation 66
EXT terminal 34
Eye cup 36

F

Face AF 76
File numbering 95
Flicker reduction 59
Focus 71
Frame rate 55
Free-run (time code) 80
FTP transfer 158

G

Gain 60
Gamma curve 120
GPS 103
Grip belt 35
Grip unit 35

H

Handle unit 34
HDMI OUT terminal 137
Headphone terminal 90
Hour meter 175

I

Index screens 125
Iris 63
ISO speed 60

J

Joystick 28, 56, 129
Joystick guide 129

Downloaded From camera-usermanual.com Canon Manuals

K

Key lock 49, 84

L

Language 27
Lens firmware 33
Light metering mode 67
LUT (lookup table) 53

M

Magnification 73
Menu settings 169
Message list 189
MIC terminal 84
Microphone
- Built-in 84
- External 84, 85
- Monaural 84

Microphone attenuator 87, 90
Microphone sensitivity 86, 90
Modular units 31
Monitor delay 141
Movie format 54
MP4 format 54
My Menu 29

N

ND filter 62
Non-drop frame (time code) 81

O

OLED screen 37, 38
One-shot AF 74
Onscreen displays 50, 122, 128
Onscreen markers 78

P

Peaking 72
Peripheral illumination correction 32
Phantom power (microphone) 88
Photos
- Copying 165
- Copying custom picture files 167
- Deleting 166
- Viewing 164

Playback
- Clips 127
- Photos 164

Playback via Browser 161
Power supply 23
POWER switch 25
Pre-recording mode 96
Push auto iris 65

R

Rec run (time code) 80
Recording
- Clips 47
- Photos 163

Relay recording 43
Remaining battery 24
Remote Controller 105
REMOTE terminal 105
Resetting all camcorder settings 173
Resolution (frame size) 54
Reviewing a recording 94
Running mode (time code) 80

S

Safe area 78
Saving Clips to a Computer 143
SD card 41
- Compatible SD cards 40
- Initializing 42
- Inserting/Removing 41
- Recovering data 44
- Switching SD card slots 42, 126

Shooting frame rate 96
Shots 98, 132
Shoulder Strap 39
Shutter speed 57
Slow & fast motion recording mode 96
Special recording modes 96
Specifications 201
Status screens 176
System frequency 54

T

Tally lamps 47, 173
Terminal covers 39
Thumb rest 35
Time code 80
Tripod 38

Downloaded From camera-usermanual.com Canon Manuals

Troubleshooting 185
Turning the camcorder on/off 25

U

USB terminal 143
User bit 83

V

Vectorscope 93
Video configuration 54
Video output configuration 135
Video scopes 92
View assistance 53
Viewfinder 37, 38
Volume 129

W

Waveform monitor 92
White balance 68, 120
Wide DR (preset custom picture) 111
Wi-Fi functions 145

X

XLR terminals 84

Z

Zebra pattern 79

Downloaded From camera-usermanual.com Canon Manuals

USA

CANON CINEMA EOS LIMITED WARRANTY FOR PRODUCTS PURCHASED IN THE UNITED STATES

The limited warranty set forth below is given by Canon U.S.A., Inc. ('Canon USA') with respect to (a) the Canon Cinema EOS Product, and (b) the accessories for the Canon Cinema EOS Product (if any), packaged with this limited warranty (collectively the "Products")* and purchased in the United States. This limited warranty is only effective upon presentation of your Bill of Sale or other proof of purchase. The Products are warranted to the original end-user purchaser, when delivered in new condition in its original container, under normal use against defective materials or workmanship as follows: Parts: At Canon USA's option, defective parts will be exchanged for new parts or comparable rebuilt parts for a period of ONE YEAR from the date of original purchase. Labor: For a period of ONE YEAR from the date of original purchase, labor will be provided free of charge by Canon USA's factory service centers or designated service facilities located in the United States. When returning Products under this warranty, you must pre-pay the shipping charges, and you must enclose a copy of the Bill of Sale or other proof of purchase with a complete explanation of the problem. During the ONE-YEAR warranty period, repairs will be made and the Products will be return-shipped to you free of charge. For repairs after the warranty period is over, you will be given an estimate of the cost of repair and an opportunity to approve or disapprove of the repair expense before it is incurred. If you approve, repairs will be made and the Products will be returned to you at your risk and expense. If you disapprove, we will return-ship the Products to you at no charge to you to an address within the United States.

This limited warranty only applies if the Products are used in conjunction with compatible computer equipment and compatible software, as to which items Canon USA will have no responsibility. Canon USA shall have no responsibility under this limited warranty for use of the Products in conjunction with incompatible peripheral equipment and/or incompatible software. Non-Canon brand peripheral equipment and software which may be distributed with, or factory loaded on, the Products, are sold 'AS IS' without warranty of any kind by Canon USA, including any implied warranty regarding merchantability or fitness for a particular purpose. The sole warranty with respect to such non-Canon brand items is given by the manufacturer or producer thereof.

*Except for the battery pack packaged with the Products, which carries a separate ninety (90) day limited warranty.

In order to obtain warranty service, please contact the authorized Canon retail dealer from whom you purchased the Products or contact the CANON INFORMATION CENTER AT **855-CINE-EOS** (855-246-3367) or on the internet at **pro.usa.canon.com/support**. You will be directed to the nearest service facility for your Products.

This Limited Warranty covers all defects encountered in normal use of the Products and does not apply in the following cases:

A. Loss or damage to the Products due to abuse, mishandling, accident, improper maintenance, use of non-Canon accessories or failure to follow operating, maintenance or environmental instructions prescribed in Canon USA's user's manual;
B. If the Products are defective as a result of leaking batteries, sand, dirt or water damage;
C. If defects or damages are caused by the use of parts or supplies (other than those sold by Canon USA) that cause damage to the Products or that cause abnormally frequent service calls or service problems;
D. If defects or damages are caused by service other than Canon USA's factory service centers or authorized service facilities;
E. Any internal modification to product hardware or firmware;
F. Any applicable fee for Maintenance of the Products;
G. If the Product has had its serial number or dating altered or removed.

This Limited Warranty does not apply to Products purchased outside the United States. This Limited Warranty does not apply to accessories or consumables not originally packaged with the Product. Please retain this warranty card and your Bill of Sale as a permanent record of your purchase. This card ensures that you are contacted promptly should there be a safety inspection, modification or Product recall under applicable laws or regulations.

NO IMPLIED WARRANTY, INCLUDING MERCHANTABILITY AND FITNESS FOR A PARTICULAR PURPOSE APPLIES TO THE PRODUCTS AFTER THE APPLICABLE PERIOD OF EXPRESS WARRANTY OR GUARANTY (EXCEPT AS MENTIONED ABOVE) GIVEN BY ANY PERSON, FIRM OR CORPORATION WITH RESPECT TO THE PRODUCTS SHALL BIND CANON USA (SOME STATES DO NOT ALLOW LIMITATIONS ON HOW LONG AN IMPLIED WARRANTY LASTS, SO THE ABOVE LIMITATION OR EXCLUSION MAY NOT APPLY TO YOU). CANON USA SHALL NOT BE LIABLE FOR LOSS OF REVENUES OR PROFITS, EXPENSE FOR SUBSTITUTE PRODUCTS OR SERVICE, STORAGE CHARGES, LOSS OR CORRUPTION OF DATA, INCLUDING WITHOUT LIMITATION, LOSS OR CORRUPTION OF DATA STORED ON THE PRODUCTS' HARD DRIVE, OR ANY OTHER SPECIAL, INCIDENTAL OR CONSEQUENTIAL DAMAGES CAUSED BY THE USE, MISUSE OR INABILITY TO USE THE PRODUCTS, REGARDLESS OF THE LEGAL THEORY ON WHICH THE CLAIM IS BASED, AND EVEN IF CANON USA HAS BEEN ADVISED OF THE POSSIBILITY OF SUCH DAMAGES. NOR SHALL RECOVERY OF ANY KIND AGAINST CANON USA BE GREATER THAN THE PURCHASE PRICE OF THE PRODUCTS SOLD BY CANON USA AND CAUSING THE ALLEGED DAMAGE. WITHOUT LIMITING THE FOREGOING, YOU ASSUME ALL RISK AND LIABILITY FOR LOSS, DAMAGE OR INJURY TO YOU AND YOUR PROPERTY AND TO OTHERS AND THEIR PROPERTY ARISING OUT OF USE, MISUSE OR INABILITY TO USE THE PRODUCTS NOT CAUSED DIRECTLY BY THE NEGLIGENCE OF CANON USA (SOME STATES DO NOT ALLOW THE EXCLUSION OR LIMITATION OF INCIDENTAL OR CONSEQUENTIAL DAMAGES, SO THE ABOVE LIMITATION MAY NOT APPLY TO YOU). THIS LIMITED WARRANTY SHALL NOT EXTEND TO ANYONE OTHER THAN THE ORIGINAL PURCHASER OF THE PRODUCTS OR THE PERSON FOR WHOM IT WAS PURCHASED AS A GIFT.

This warranty gives you specific legal rights, and you may also have other rights which vary from state to state.

CANON U.S.A., INC.

Downloaded From camera-usermanual.com Canon Manuals

CANADA

CANON CINEMA EOS LIMITED WARRANTY FOR PRODUCTS PURCHASED IN CANADA

The limited warranty set forth below is given by Canon Canada Inc. ('Canon Canada') with respect to (a) the Canon Cinema EOS product, and (b) the accessories for the Canon Cinema EOS Product (if any), packaged with this limited warranty (collectively the "Products")* and purchased in Canada. This limited warranty is only effective upon presentation of your Bill of Sale or other proof of purchase. The Products are warranted to the original end-user purchaser, when delivered in new condition in its original container, under normal use against defective materials or workmanship as follows: Parts: At Canon Canada's option, defective parts will be exchanged for new parts or comparable rebuilt parts for a period of ONE YEAR from the date of original purchase. Labor: For a period of ONE YEAR from the date of original purchase, labor will be provided free of charge by Canon Canada's factory service center or designated service facilities located in Canada. When returning Products under this warranty, you must pre-pay the shipping charges, and you must enclose a copy of the Bill of Sale or other proof of purchase with a complete explanation of the problem. During the ONE-YEAR warranty period, repairs will be made and the Products will be return-shipped to you free of charge. For repairs after the warranty period is over, you will be given an estimate of the cost of repair and an opportunity to approve or disapprove of the repair expense before it is incurred. If you approve, repairs will be made and the Products will be returned to you at your risk and expense. If you disapprove, we will return-ship the Products to you at no charge to you to an address within Canada.

This limited warranty only applies if the Products are used in conjunction with compatible computer equipment and compatible software, as to which items Canon Canada will have no responsibility. Canon Canada shall have no responsibility under this limited warranty for use of the Products in conjunction with incompatible peripheral equipment and/or incompatible software. Non-Canon brand peripheral equipment and software which may be distributed with, or factory loaded on, the Products, are sold 'AS IS' without warranty of any kind by Canon Canada, including any implied warranty or condition regarding merchantability or fitness for a particular purpose. The sole warranty with respect to such non-Canon brand items is given by the manufacturer or producer thereof.

*Except for the battery pack packaged with the Products, which carries a separate ninety (90) day limited warranty.

In order to obtain warranty service, please contact the authorized Canon retail dealer from whom you purchased the Products or contact the CANON PROFESSIONAL SERVICE CENTRE 1-800-667-2666 or on the internet at **www.canon.ca/pro**. You will be directed to the nearest service facility for your Products.

This Limited Warranty covers all defects encountered in normal use of the Products and does not apply in the following cases:

A. Loss or damage to the Products due to abuse, mishandling, accident, improper maintenance, use of non-Canon accessories or failure to follow operating, maintenance or environmental instructions prescribed in Canon Canada's user's manual;
B. If the Products are defective as a result of leaking batteries, sand, dirt or water damage;
C. If defects or damages are caused by the use of parts or supplies (other than those sold by Canon Canada) that cause damage to the Products or that cause abnormally frequent service calls or service problems;
D. If defects or damages are caused by service other than Canon Canada's factory service centers or authorized service facilities;
E. Any internal modification to product hardware or firmware;
F. Any applicable fee for Maintenance of the Products;
G. If the Product has had its serial number or dating altered or removed.

This Limited Warranty does not apply to Products purchased outside Canada. This Limited Warranty does not apply to accessories or consumables not originally packaged with the Product. Please retain this warranty card and your Bill of Sale as a permanent record of your purchase. This card ensures that you are contacted promptly should there be a safety inspection, modification or Product recall under applicable laws or regulations.

NO IMPLIED WARRANTY OR CONDITION, INCLUDING MERCHANTABILITY AND FITNESS FOR A PARTICULAR PURPOSE APPLIES TO THE PRODUCTS AFTER THE APPLICABLE PERIOD OF EXPRESS WARRANTY OR GUARANTY (EXCEPT AS MENTIONED ABOVE) GIVEN BY ANY PERSON, FIRM OR CORPORATION WITH RESPECT TO THE PRODUCTS SHALL BIND CANON CANADA (SOME PROVINCES DO NOT ALLOW LIMITATIONS ON HOW LONG AN IMPLIED WARRANTY OR CONDITION LASTS, SO THE ABOVE LIMITATION OR EXCLUSION MAY NOT APPLY TO YOU). CANON CANADA SHALL NOT BE LIABLE FOR LOSS OF REVENUES OR PROFITS, EXPENSE FOR SUBSTITUTE PRODUCTS OR SERVICE, STORAGE CHARGES, LOSS OR CORRUPTION OF DATA, INCLUDING WITHOUT LIMITATION, LOSS OR CORRUPTION OF DATA STORED ON THE PRODUCTS' HARD DRIVE, OR ANY OTHER SPECIAL, INCIDENTAL OR CONSEQUENTIAL DAMAGES CAUSED BY THE USE, MISUSE OR INABILITY TO USE THE PRODUCTS, REGARDLESS OF THE LEGAL THEORY ON WHICH THE CLAIM IS BASED, AND EVEN IF CANON CANADA HAS BEEN ADVISED OF THE POSSIBILITY OF SUCH DAMAGES. NOR SHALL RECOVERY OF ANY KIND AGAINST CANON CANADA BE GREATER THAN THE PURCHASE PRICE OF THE PRODUCTS SOLD BY CANON CANADA AND CAUSING THE ALLEGED DAMAGE. WITHOUT LIMITING THE FOREGOING, YOU ASSUME ALL RISK AND LIABILITY FOR LOSS, DAMAGE OR INJURY TO YOU AND YOUR PROPERTY AND TO OTHERS AND THEIR PROPERTY ARISING OUT OF USE, MISUSE OR INABILITY TO USE THE PRODUCTS NOT CAUSED DIRECTLY BY THE NEGLIGENCE OF CANON CANADA (SOME PROVINCES DO NOT ALLOW THE EXCLUSION OR LIMITATION OF INCIDENTAL OR CONSEQUENTIAL DAMAGES, SO THE ABOVE LIMITATION MAY NOT APPLY TO YOU). THIS LIMITED WARRANTY SHALL NOT EXTEND TO ANYONE OTHER THAN THE ORIGINAL PURCHASER OF THE PRODUCTS OR THE PERSON FOR WHOM IT WAS PURCHASED AS A GIFT.

This warranty gives you specific legal rights, and you may also have other rights which vary from province to province.

CANON CANADA INC.

Downloaded From camera-usermanual.com Canon Manuals

DIE0463000

Canon

Canon Inc. 30-2, Shimomaruko 3-chome, Ohta-ku, Tokyo 146-8501, Japan
CANON Europa N.V.
Bovenkerkerweg 59, 1185 XB Amstelveen, The Netherlands http://www.canon-europe.com

ASIA and HONG KONG, S.A.R.
Canon Hongkong Company Ltd
19/F, The Metropolis Tower, 10 Metropolis Drive, Hunghom, Kowloon, Hong Kong
+852 3191 2333, +852 2428 3963

AUSTRALIA http://www.canon.com.au
Canon Australia Pty Ltd
13-13-83 (within Australia only)
(61) 02-9805-2555

CANADA http://www.canon.ca/pro
CANON CANADA INC.
❖ Professional Product Support / Soutien des produits professionnels
(800) 667-2666

CENTRO Y SURAMÉRICA http://www.cla.canon.com
CANON LATIN AMERICA, INC.

MÉXICO http://www.canon.com.mx
CANON MEXICANA, S DE RL DE CV
52 (55) 5249-4905

NEW ZEALAND http://www.canon.co.nz
Canon New Zealand Ltd
0800-222-666 (within New Zealand only)
(64) 09-489-0300

SINGAPORE
Canon Singapore Pte. Ltd
1 HarbourFront Avenue, #04-01 Keppel Bay Tower, Singapore 098632
(65) 6799 8888, (65) 6799 8882

UNITED KINGDOM
Canon UK Ltd
CCI Service Centre, Unit 130, Centennial Park, Borehamwood, Hertfordshire, WD6 3SE
0844-369-0100

USA
CANON U.S.A., INC. http://pro.usa.canon.com
http://pro.usa.canon.com/support
(855) CINE-EOS (855-246-3367) (USA only)

Visit your local Canon Web site to download the latest version of this Instruction Manual.

0187W144
© CANON INC. 2014
PUB. DIE-0463-000

Downloaded From camera-usermanual.com Canon Manuals